SPECTRUM FX 3D

RGBW LED marquee module

Features

- DMX Control – for use with Principal Sloan line of DMX controllers
- Four interchangeable lens options: Clear Flat, Clear Prismatic, Clear S14, Diffused Round



Optical Specifications

SKU M-SP3DS1-24-FX

Lumen output per module ..... R: 380 lm
G: 8.50 lm
B: 1.95 lm
W: 15.00 lm

LED color ..... RGBW
R: 619-624 nm
G: 523-528 nm
B: 465-470 nm
W: 3000 K

Electrical/Mechanical Specifications

Input voltage ..... 24 VDC

Rated power per module ..... R ..... 0.6 W
G ..... 0.6 W
B ..... 0.6 W
W ..... 0.6 W

Max. mods per 96W power supply 50

Modules per daisy chain 25

Length per daisy chain ..... 18.4 ft

Mounting ..... S14 socket

System Specifications

Control DMX512

Operating temperature ..... -40° C to +60° C

Environment IP67

Safety approval ..... UL

Warranty ..... 5-year product / 5-year labor

Accessories*

Description	Part number
Clear Prismatic Lens	M-SP3DS-CLRPRSM1
Clear S14 Lens	M-SP3DS-CLRS14
Diffused Round Lens	M-SP3DS-DIFFRND1
3-ft Male-to-Female Jumper Cable	M-FX-3FT-M/F
40-ft Leader Cable with Female Connector	M-FX-40FT-F

* Removable clear flat lens included on all modules.

Specifications subject to change without notice.

Lens Dimensions

Diffused round lens

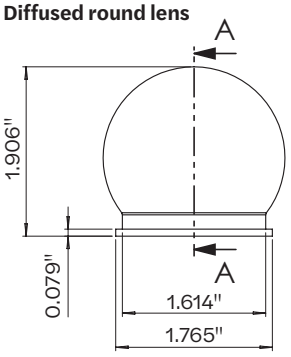

Clear flat lens

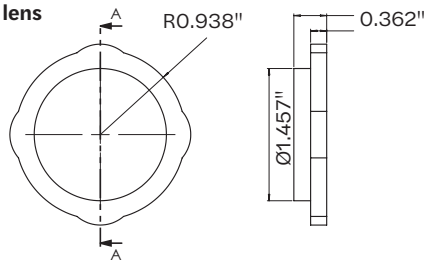

Clear prismatic lens

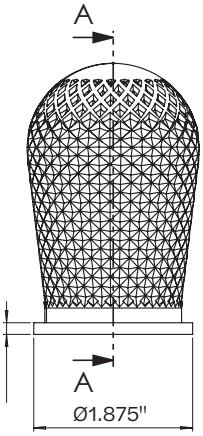

PRINCIPAL SLOAN
A Principal Industries Company

SPECTRUM FX 3D

RGBW LED marquee module

Module Dimensions

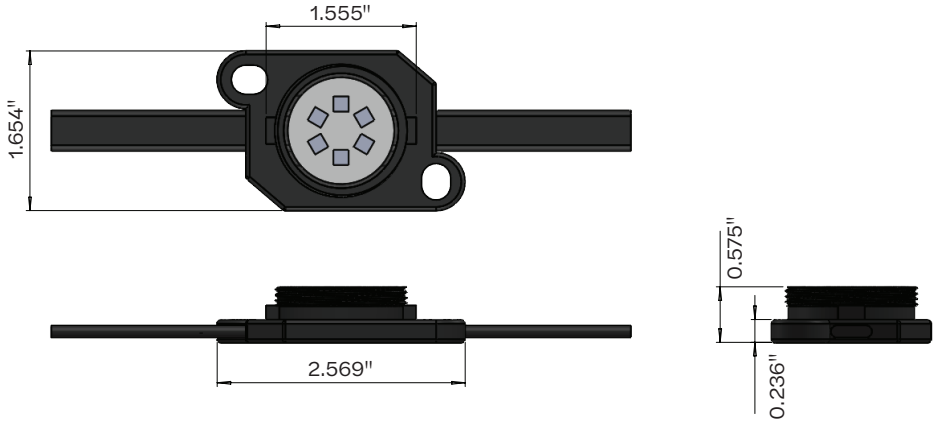

System Diagram

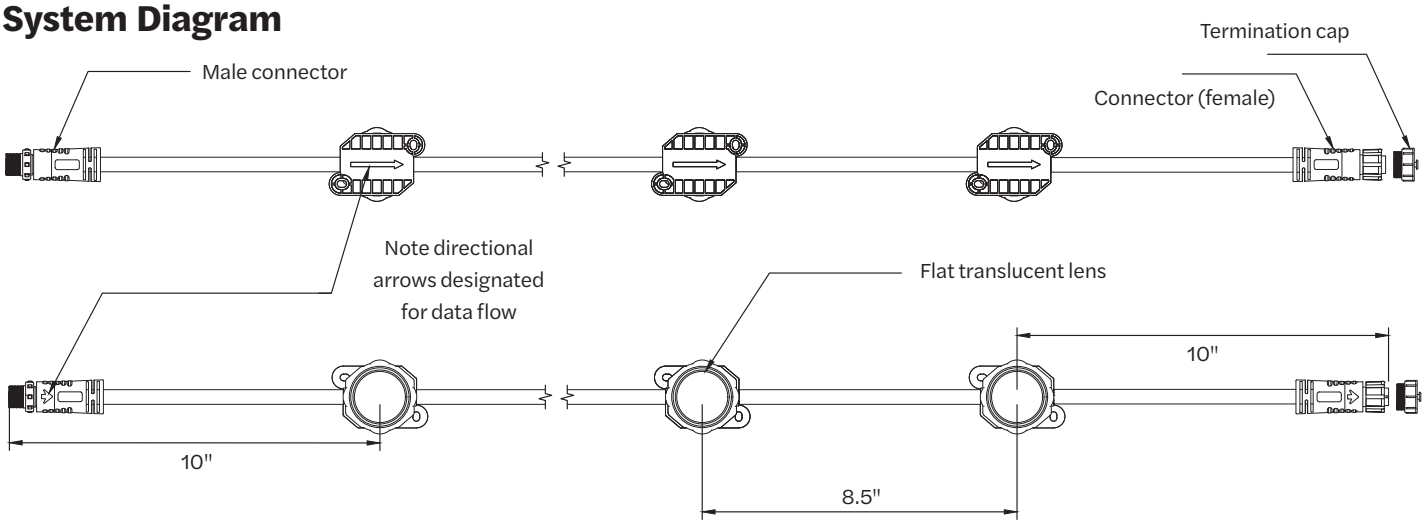

Wiring

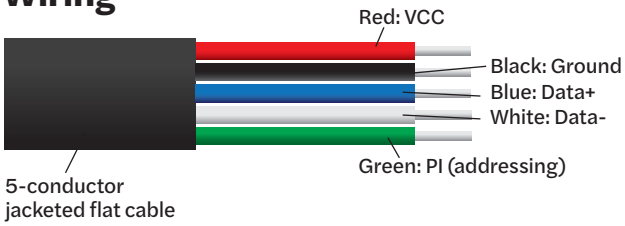

5/5 YEAR
5-Year Product | 5-Year Labor
WARRANTY

pindustries.com
325.227.4577
3490 Venture Dr., San Angelo, TX 76905

© 2026 Principal Industries Rev B 2026-04-14

PRINCIPAL SLOAN
A Principal Industries Company