HanleyLED

PHOENIX 3

12 VDC

12V LED channel letter and sign cabinet illumination

Phoenix Series

Specifications

Beam angle ..... 170° Phoenix wing optics

Ideal depth ..... 3 - 12"

Power (W) ..... 1.2 W/mod (1.77 W/ft)

Efficacy ..... 114 lm/W

Modules/ft ..... 1.48/ft (fully-stretched)

Environment IP68

Operating temp. ..... -40° C to +60° C

Storage temp. ..... -40° C to +70° C

Cascade ..... 40 mods single-ended power feed
80 mods double-ended power feed

Packaging ..... Anti-static bag, 80 modules (54 ft)/bag

Warranty ..... 10-Year Product/5-Year Limited Labor

Slim module design

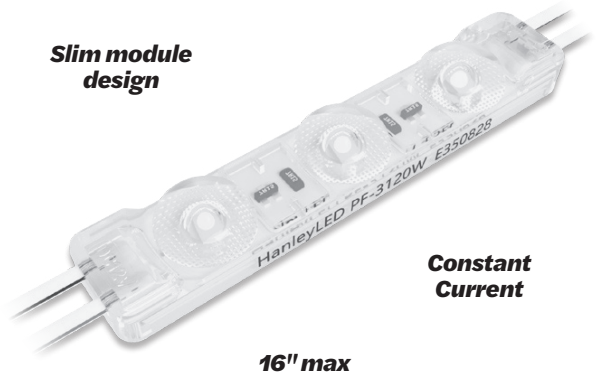

Constant Current

16" max stroke

Product Options

SKU	CCT/Color	Lumens
HLED-PF3120W	7000 K	137 lm/mod (202.76 lm/ft)
HLED-PF3120R	Red (620-625 nm)	41 lm/mod (60 lm/ft)

E350828 E487794 RoHS Compliant

Light Distribution

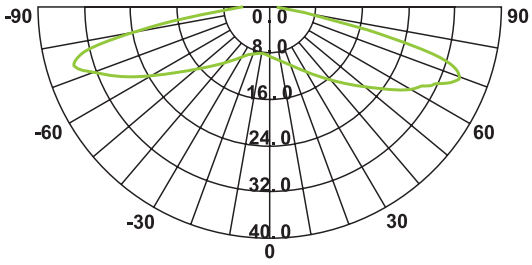

Power Supply Options

Product	35 W	60 W	100 W	120 W	150 W	180 W	240 W
Phoenix 3	29 mods	50 mods	82 mods	100 mods	123 mods	150 mods	200 mods

Dimensions

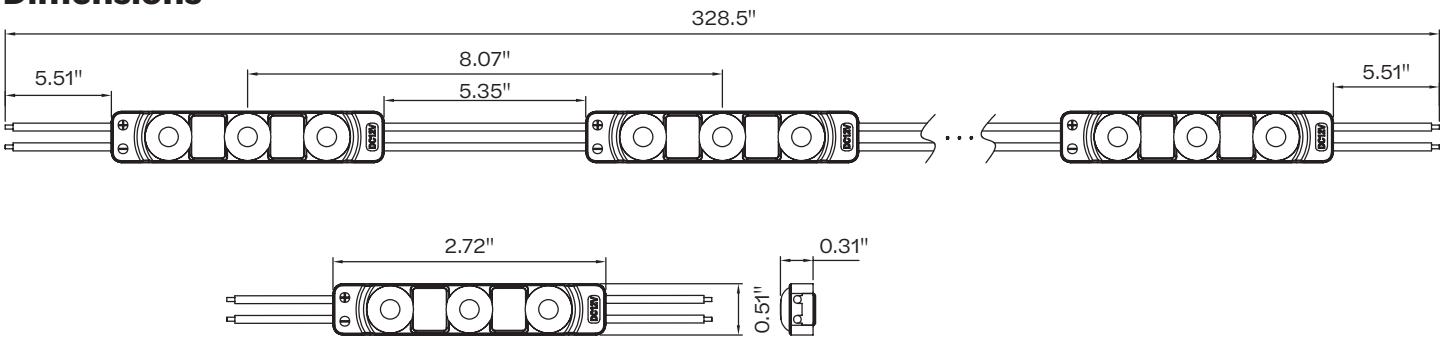

10|5 YEAR
10-Year Product | 5-Year Labor
WARRANTY

principalsloan.com
325.227.4577
3490 Venture Dr., San Angelo, TX 76905

© 2025 Principal Industries Rev C 2025-01-16

Specifications subject to change without notice.

PRINCIPAL SLOAN
A Principal Industries Company