WESTRIM PRODUCTS
A FRANCE LIGHTING SOLUTIONS COMPANY

WESTRIM SIGN SWITCH

MECHANICAL POWER SWITCH

PUTTING POWER AT YOUR FINGER TIP

SIGNAGE | CABINETS | CANS



c UL us E469421 E209062

SMALLER SIZE FOR EASIER INSTALL

20 AMP / 2HP @ 120-277 VAC

UL 61058-1 (SWITCH) & UL 879 (SIGN ACCESSORIES)

12" LEAD WIRES (14 AWG, 600V, 105°C)

20 AMP / 2HP @ 120-277 VAC

ON / OFF FACEPLATE

FITS 1/2" PANEL OPENING

INTERNAL TOGGLE SEAL

SILICONE BOOT

EXAMPLE APPLICATION



NOTE* PER UL48, 20 AMP VAC RATED SWITCHES ARE LIMITED TO A TOTAL TRANSFORMER LOAD OF 10 AMPS.

ASK ABOUT OUR SWITCH SAFETY LOCKING PLATE

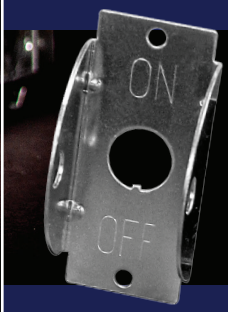

PART #38146
CATALOG #SWSLP

DESCRIPTION	FRANCE PART #	WESTRIM CATALOG #	PACKAGING
SIGN SWITCH W/BOOT, 20 AMP (25)	38057-01	SW20A2HP	25 PER BOX / 20 BOXES PER CASE

ASK YOUR DISTRIBUTOR OR OUR REPRESENTATIVES FOR MORE INFORMATION

WESTERN U.S. REP
DWIGHT J. AUCH
AUCHDJ@msn.com or 760.458.3253

CENTRAL & EASTERN U.S. REP
SCOTT CUTCHER
me@scottcutcher.com or 615.815.4128

FranceLighting.com - 2268 Fairview Blvd., Fairview, TN 37062 - 800.793.4793

WESTRIM PRODUCTS
A FRANCE LIGHTING SOLUTIONS COMPANY

INSTALLATION & SPECIFICATIONS

INSTALLATION INSTRUCTIONS

1. Drill or punch 1/2" hole through mounting surface. De-burr.
2. Remove one nut and "on / off" plate, leaving one nut and lock-washer on switch.
3. With switch in mounting hole, check that barrel extends 3 to 4 threads beyond face of mounting surface.
4. Adjust nut still on switch to obtain this distance.
5. Place switch in mounting hole.
6. For dry locations, slide "on / off" plate over barrel, followed by nut, and tighten.
7. For wet / damp locations, slip boot over toggle and tighten to mounting surface.
8. For "on / off" indication when using boot, use decals provided.

c UL us
E469421
E209062

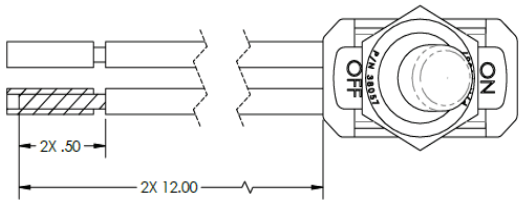

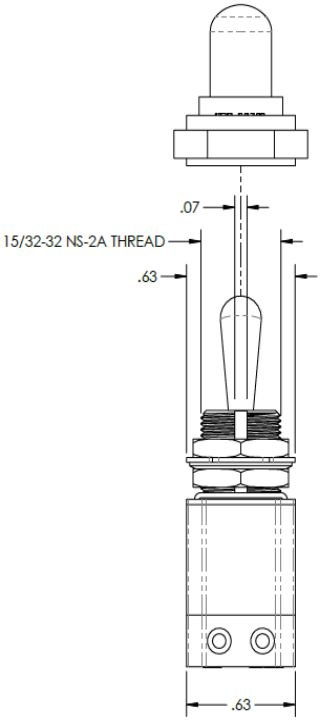

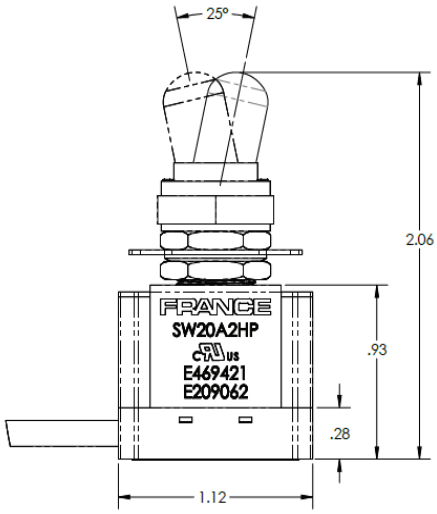

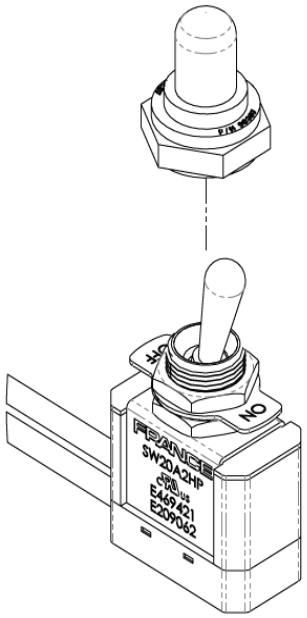

PRODUCT SPECIFICATIONS

Proudly Distributed by: