# Photocontrol - NightFox™ Stem and Swivel Mount Electronic Photocontrol, 120-277 V

Item EK4236S



## PRODUCT DESCRIPTION

NightFox™ electronic photocontrols permanently install on outdoor electrical boxes or outdoor lighting fixtures. Ideal for LED fixtures with long-life expectations. ½"-14 NPSM threaded stem fits standard outlet boxes and wall packs with 9" wire leads.

## FEATURES

- Non-drift silicon light sensor with IR filter
- DC relay with zero-crossing circuitry for extended life
- Conformal coated PCB
- 15-year design life
- Exceeds 10,000 ON/OFF switching cycles
- Fail ON mode
- Ideal for single or multifixture HID and LED installations (up to 1,650 W @ 277 VAC)
- 255 J MOV surge protection element
- 1/2"-14 NPSM threaded stem fits standard outlet boxes and wall packs
- #18 AWG wire leads

## APPLICATIONS

- Parking Lot Lighting
- Landscape Lighting
- Exterior Lighting
- Street Lighting
- Pedestrian Pathway Lighting

## TECHNICAL DATA

| General | |
|---|---|
| Model Number | EK4236S |
| Description | NightFox™ Stem and Swivel Mount Electronic Photocontrol, 120-277 V |
| UPC Code | 078275146303 |
| Brand | Intermatic |
| Country of Origin (Intermatic) | MEXICO |
| Warranty | 8-Year limited |
| Usage Environments | Outdoor |
| Photocontrol Type | Electronic |
| Expected Lifetime (Years) | 15 |
| Expected Lifetime (Operations) | 10000 |
| Application Compatibilities | LED; Incandescent; HID |
| Photocontrol Style | Stem; Swivel Mount |
| Photocontrol Sensor Location | Side |

| Control Specifications | |
|---|---|
| Sensor Time Delay | Instant ON; 2 sec to 5 sec OFF |
| Photocell Type | Silicon Diode |
| Photo Control Switch Type | Relay |
| Fail Mode | ON |
| Activation On | 1.5 fc |
| Activation Off | 4.5 fc |


© 10/01/2020

| Dimensions | |
|---|---|
| Product Height (in) | 5 5/8 |
| Product Height (mm) | 142.9 |
| Product Width (in) | 1 5/16 |
| Wire Lead Length (in) | 6 |
| Wire Size Max | #18 AWG |

| Material Specifications | |
|---|---|
| Cover Color | Gray |
| Housing Material | Polycarbonate |

| Load Ratings | |
|---|---|
| Tungsten Range(s) | 1000 W |
| Ballast (Fluorescent) Range(s) | 1800 VA |
| Electronic Ballast Range(s) | 6 A, 120-277 VAC, 50/60 Hz |

| Electrical Specifications | |
|---|---|
| Wiring Option | Wire leads |
| Input Voltage Range(s) | 120-277 VAC, 50/60 Hz |
| Surge Protection Technology | 255 J MOV, 5,000 A Surge |

| Packaging | |
|---|---|
| Shipping Weight (lbs) | 0.28 |
| Unit Carton Dimensions (H x W x D) in | 4.875 x 3 x 1.75 in |

| Environmental Specifications | |
|---|---|
| Temperature (operation) | -40°C..70°C |

| Standards and Certifications | |
|---|---|
| UL Certification | UL |
| CSA Certification | CSA |
| Other Certifications and Compatibilities | CA Title 20; Ansi C136.24 |
| California Proposition 65 | DEHP |
| RoHS Certification | Yes |
| PDF Standards and Certifications | UL; CSA; CA Title 20 |


© 10/01/2020

## DRAWINGS AND DIAGRAMS

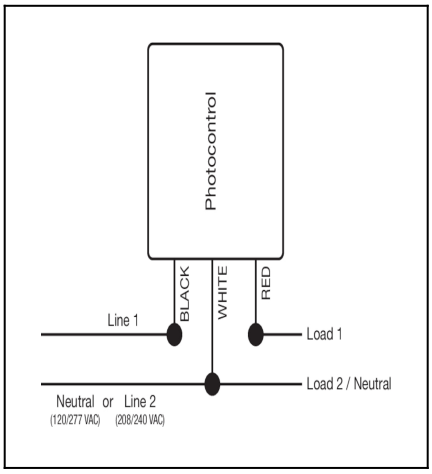


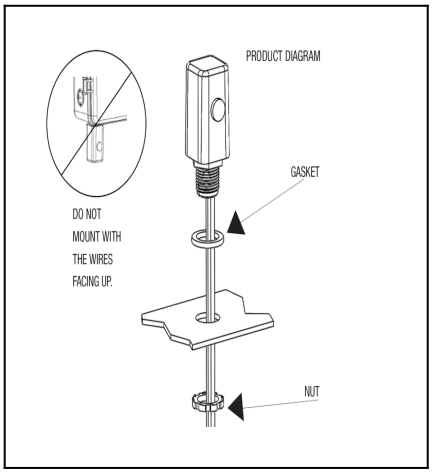


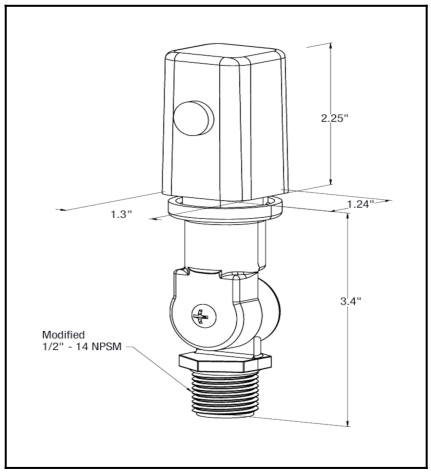

## ACCESSORIES



22LG0120

Light Guard Accessory for EK4000 Series Electronic Fix Mount Photocontrols



6LV1352

Light Shield Accessory for EK4036S, EK4436SM, K4000 Series Button Photocontrols



K43-WP-KIT

Wall Plate Kit for EK4036S, K4000 Series Button Photocontrols



LGLBL

Lens Sticker Accessory for EK4000 & K4000 Series Photocontrols