Photocontrol - NightFox™ Stem Mount Electronic Photocontrol, 120-277 V

Item EK4136S



PRODUCT DESCRIPTION

NightFox™ electronic photocontrols permanently install on outdoor electrical boxes or outdoor lighting fixtures. Ideal for LED fixtures with long-life expectations. ½"-14 NPSM threaded stem fits standard outlet boxes and wall packs with 9" wire leads.

FEATURES

- Non-drift silicon light sensor with IR filter
- DC relay with zero-crossing circuitry for extended life
- Conformal coated PCB
- 15-year design life
- Exceeds 10,000 ON/OFF switching cycles
- Fail ON mode
- Ideal for single or multifixture HID and LED installations (up to 1,650 W @ 277 VAC)
- 255 J MOV surge protection element
- 1/2"-14 NPSM threaded stem fits standard outlet boxes and wall packs
- #18 AWG wire leads

APPLICATIONS

- Parking Lot Lighting
- Landscape Lighting
- Exterior Lighting
- Street Lighting
- Pedestrian Pathway Lighting

TECHNICAL DATA

General	
Model Number	EK4136S
Description	NightFox™ Stem Mount Electronic Photocontrol, 120-277 V
UPC Code	078275146297
Brand	Intermatic
Country of Origin (Intermatic)	MEXICO
Warranty	8-Year limited
Usage Environments	Outdoor
Photocontrol Type	Electronic
Expected Lifetime (Years)	15
Expected Lifetime (Operations)	10000
Application Compatibilities	LED; Incandescent; HID
Photocontrol Style	Stem Mount
Photocontrol Sensor Location	Side

Control Specifications	
Sensor Time Delay	Instant ON; 2 sec to 5 sec OFF
Photocell Type	Silicon Diode
Photo Control Switch Type	Relay
Fail Mode	ON
Activation On	1.5 fc
Activation Off	4.5 fc

© 10/01/2020

Dimensions	
Product Height (in)	2 1/4
Product Height (mm)	57.2
Product Width (in)	1 5/16
Wire Lead Length (in)	9
Wire Size Max	#18 AWG

Material Specifications	
Cover Color	Gray
Housing Material	Polycarbonate

Load Ratings	
Tungsten Range(s)	1000 W
Ballast (Fluorescent) Range(s)	1800 VA
Electronic Ballast Range(s)	6 A, 120-277 VAC, 50/60 Hz

Electrical Specifications	
Wiring Option	Wire leads
Input Voltage Range(s)	120-277 VAC, 50/60 Hz
Surge Protection Technology	255 J MOV, 5,000 A Surge

Packaging	
Shipping Weight (lbs)	0.215
Unit Carton Dimensions (H x W x D) in	4.875 x 3 x 1.75 in

Environmental Specifications	
Temperature (operation)	-40°C..70°C

Standards and Certifications	
UL Certification	UL
CSA Certification	CSA
Other Certifications and Compatibilities	CA Title 20; Ansi C136.24
California Proposition 65	DEHP
RoHS Certification	Yes
PDF Standards and Certifications	UL; CSA; CA Title 20

© 10/01/2020

DRAWINGS AND DIAGRAMS

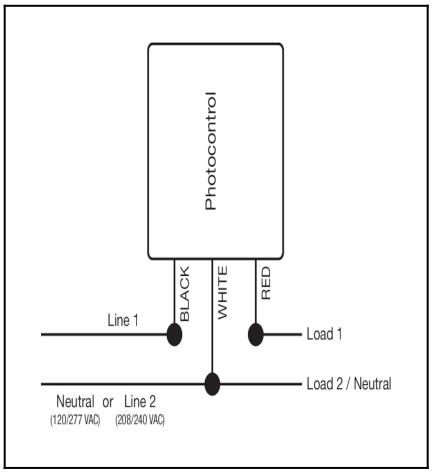

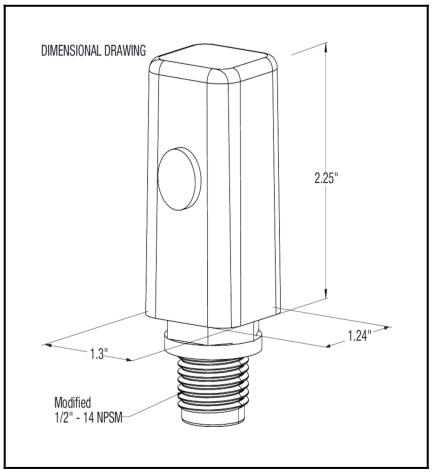

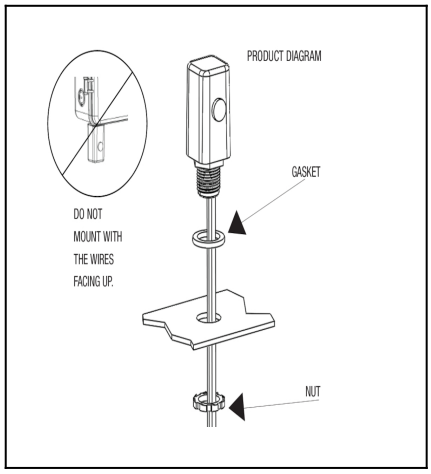

ACCESSORIES



22LG0120

Light Guard Accessory for EK4000 Series Electronic Fix Mount Photocontrols



6LV1352

Light Shield Accessory for EK4036S, EK4436SM, K4000 Series Button Photocontrols



K43-WP-KIT

Wall Plate Kit for EK4036S, K4000 Series Button Photocontrols



LGLBL

Lens Sticker Accessory for EK4000 & K4000 Series Photocontrols