SLIMLINER

Installation Guide for 701956-XWL461

SlimLINER

Installation

CAUTION: Do not mount where fixture can be completely or partially submerged in water.
ATTENTION: Ne montez pas à un endroit où l'appareil peut être complètement ou partiellement immergé dans l'eau.

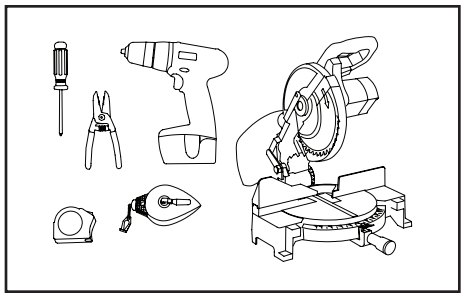

Tools: *Required:* Wire strippers, measuring tape, miter saw (for custom length field cuts), multimeter. *Optional:* Cordless drill, drill bits, #2 Phillips driver bits, chalk line.

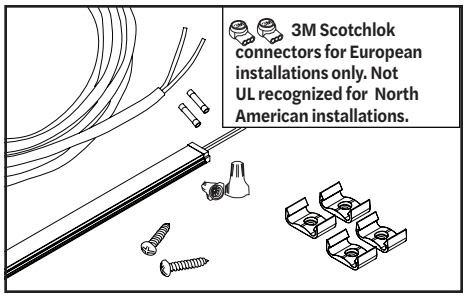

Supplies: *Required:* Butt splices or IDC connectors, wire nuts, IPS Weld-On® #16 Solvent Cement, and UL listed wet location, sunlight resistant PLTC cable. *Optional:* Mounting clips (P/N 401203), #6 Pan Head Phillips screws, appropriate thread anchor for mounting surface. **NOTE:** 3M™ Scotchlok™ connectors for European installations only.

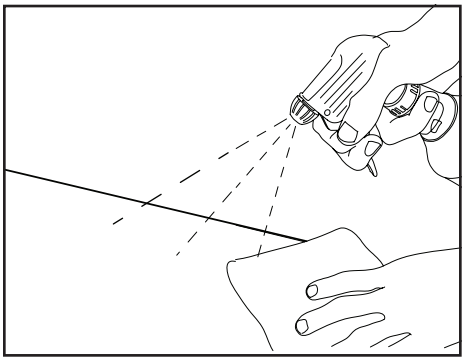

1. **Peel and stick:** ***NOTE*** – If installing with mounting clips skip to Step 2. Clean installation surface with rubbing alcohol and allow to dry. Remove tape backing and stick SlimLINER into place. Ensure it is firmly attached. Leave 0.25" (6 mm) gap between sections.

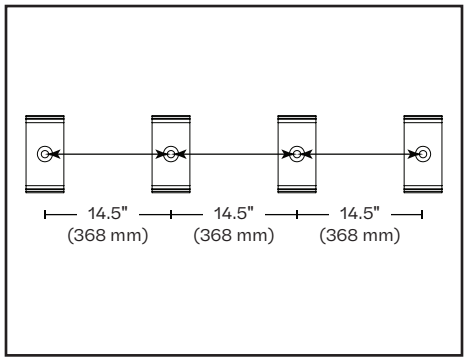

2. **Install mounting clips:** ***NOTE*** – *Skip Steps 2 and 3 if not installing with mounting clips.* Snap chalk line on surface for mounting. Install four (4) mounting clips per SlimLINER section. Place a mounting clip 1.5" (38 mm) from each end of SlimLINER section. Evenly space remaining two (2) mounting clips in approximate 14.5" (368 mm) increments.

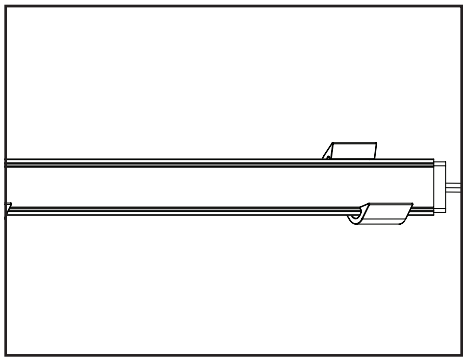

3. **Install SlimLINER sections onto mounting clips:** Slide or snap SlimLINER sections onto mounting clips. Leave 0.25" (6 mm) gap between sections.

WARNING: Check Polarity. All connections must be RED-to-RED (+) and BLACK-to-BLACK (-). Reverse polarity connections may damage LEDs and will void product warranty. **AVERTISSEMENT:** Vérifiez la polarité. Toutes les connexions doivent être ROUGE à ROUGE (+) et NOIR à NOIR (-). Des connexions inversées peuvent endommager les DEL et annuler la garantie du produit.

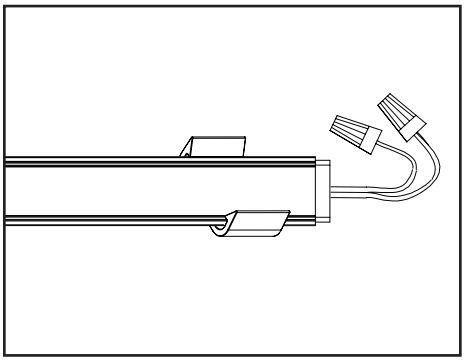

4. **Connections:** Sections may be connected in series or parallel. String of SlimLINER luminaires should not be connected to create a closed circuit. Cap all unused, exposed wire ends.

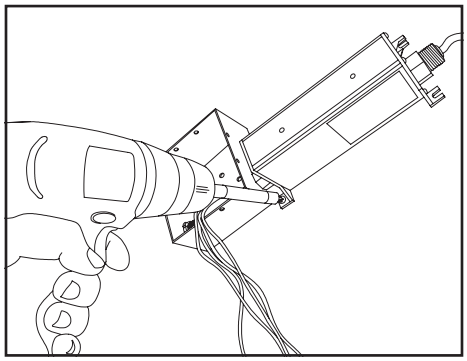

5. **Connect power supply:** See Power Supply installation guide for more information regarding power supply installation.

CAUTION: To maintain integrity of end caps and prevent water penetration around wires, do not pull or tightly bend wires or allow tension between wire connections.
ATTENTION: Pour maintenir l'intégrité des capuchons d'extrémité et empêcher la pénétration d'eau autour des fils, ne tirez pas ou ne pliez pas trop les fils, et ne permettez pas la tension entre les connexions des fils.

PRINCIPAL SLOAN
A Principal Industries Company

SLIMLINER

Installation Guide for 701956-XWL461

SlimLINER

Field Cuts

SAFETY WARNING: Failure to strictly follow these instructions may subject installer or others to personal injury. Failure to strictly follow these instructions will also void manufacturer's warranties and may cause risk of fire, product damage, damage to property and injury to persons. Please read all warnings contained below and follow all instructions carefully. **AVERTISSEMENT DE SÉCURITÉ:** Le non-respect scrupuleux de ces instructions peut exposer l'installateur ou d'autres personnes à des blessures corporelles. Le non-respect scrupuleux de ces instructions annulera également la garantie du fabricant et pourrait entraîner un risque d'incendie, de détérioration du produit, de dommages matériels et de blessures corporelles. Veuillez lire tous les avertissements ci-dessous et suivre toutes les instructions attentivement.

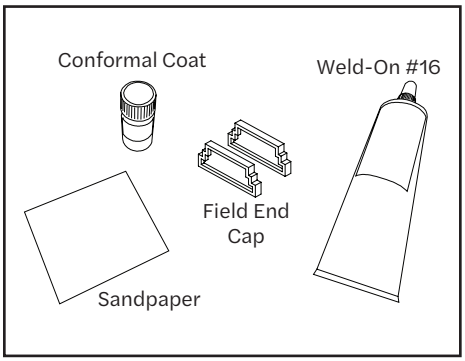

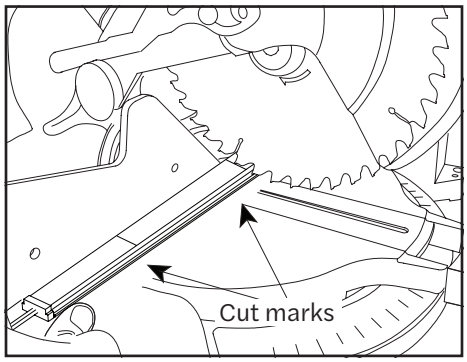

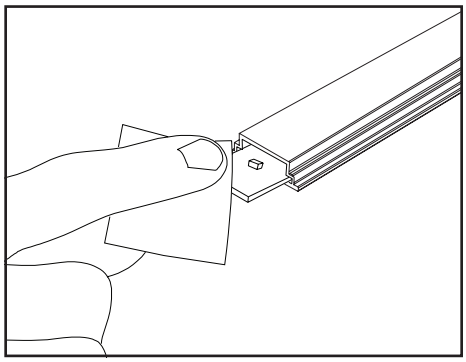

1. **Gather materials:**
   Field Cut Kit (SKU 401531) – Sandpaper, Weld-On #16, conformal coat for sealing edge of LED board (Humiseal 1B73 or Electrolube APL); and ***Acrylic Field End Cap*** (SKU 401149-FC-20).

2. **Cutting custom lengths:** Each SlimLINER can be cut in field—for two (2) usable sides—in approximate 5.5" (140 mm) increments. If a custom length is required, use a power miter saw to make a clean, straight cut on black cut line.
   NOTE: Perpendicular cuts ONLY. Set miter saw to 0º. No angled cuts. After cutting, each piece will still light if connected to power.

3. **Deburr LED board and extrusion:** Gently pull LED board out of extrusion about 0.25" (6 mm). Deburr cut-end of LED Board and SlimLINER extrusion with enclosed sandpaper. Make sure to remove all debris from LED board and extrusion.

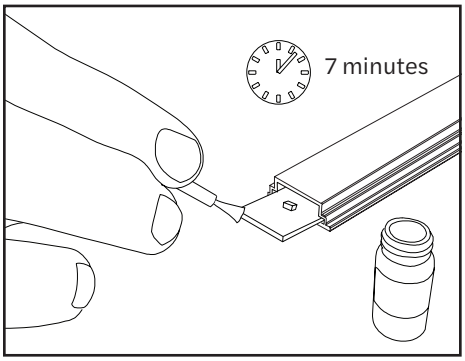

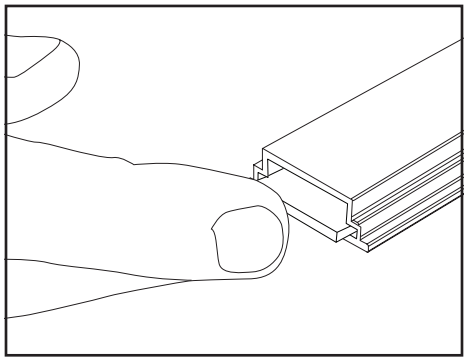

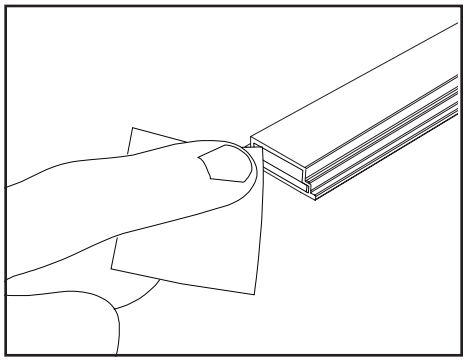

4. **Seal end of LED board with conformal coat:** Brush conformal coat (Humiseal 1B73 or Electrolube APL) onto cut edge of LED board to seal from moisture. Allow to dry for 7 minutes. Do not apply conformal coat to cut edge of extrusion or end cap.

5. **Push PCB back into extrusion:**
   After conformal coat has dried for at least 7 minutes, press circuit board as far into tube as it will go.

6. **Clean extrusion:** Ensure end of extrusion is clean and free of any foreign material. If any conformal coat adhered to extrusion, gently sand off. Avoid sanding edge of LED board.

WARNING: It is important to follow and review the safety instructions and MSDS for Weld-On #16 solvent cement packaging and Humiseal 1B73 or Electrolube APL conformal coats. Follow all safety instructions on Weld-On #16 packaging.
Humiseal 1B73 MSDS available at http://www.humiseal.com/
Electrolube APL MSDS available at https://electrolube.com/
Weld-On #16 MSDS available at http://www.ipscorp.com/

AVERTISSEMENT: Il est important de suivre et de revoir les instructions de sécurité et la fiche signalétique pour les emballages de colle à solvant Weld-On # 16 et les couches conformes Humiseal 1B73 ou Electrolube APL. Suivez toutes les instructions de sécurité sur l'emballage Weld-On # 16.
Humiseal 1B73 MSDS disponible à http://www.humiseal.com/
Electrolube APL MSDS disponible sur https://electrolube.com/
Weld-On # 16 MSDS disponible à http://www.ipscorp.com/

PRINCIPAL SLOAN
A Principal Industries Company

SLIMLINER

Installation Guide for 701956-XWL461

SlimLINER

Field Cuts (cont.)

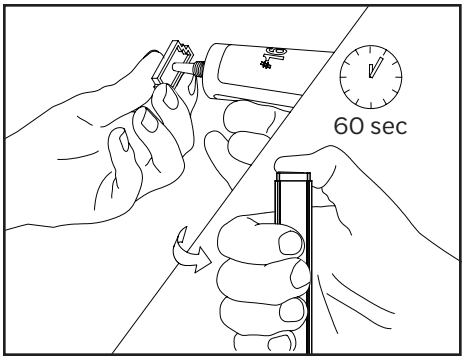

7. **Cap custom cut lengths:** Clean any debris from cut end and ensure that any exposed wires are not in contact with each other (trim wires if necessary). Apply IPS Weld-On #16 to entire rim of SlimLINER field end cap and bond to cut end of SlimLINER segment. Apply pressure to end cap for 60 seconds to ensure a strong bond.

12 VDC Power Supply Capacity Chart

Power output	Fixtures
20 W	2
25 W (EU/ROW ONLY)	2
30 W (EU/ROW ONLY)	3
60 W	6
2 × 60 W	6 × 2
2 × 75 W* (EU/ROW ONLY)	7 × 2
100 W* (EU/ROW ONLY)	10
Power used per ft (m) in watts	2.25 (7.4) W

* Must split load at power supply output to prevent exceeding maximum wire/module ampacity of 5A per single leg.

All footage based on 90% of rated capacity.

NOTE: After cutting a custom length, any piece with black and red wires protruding from original end cap will still light.

CAUTION: It is important to review and follow safety instructions on IPS Weld-On #16 packaging.
ATTENTION: Il est important de lire et de suivre les consignes de sécurité d'IPS. Emballage à souder n º 16.

WARNING: Field end caps must not have any gaps which would allow water penetration. Ensure end cap completely seals end of SlimLINER section. **AVERTISSEMENT:** Les capuchons d'extrémité de champ ne doivent pas comporter d'espaces pouvant permettre la pénétration de l'eau. Assurez-vous que le capuchon d'extrémité scelle complètement l'extrémité de la section SlimLINER.

WARNING: Field end cap must create a water tight seal. All debris must be removed to promote a good end cap bond and to avoid electrical failure. Use of other types of saws and/or use of a dull blade may lead to chipping or cracking of extrusion or create a cut that cannot be sealed resulting in product failure. Ensure extrusion bonding surface is clean. Contaminants or any adhesive other than Weld-On #16 on this surface may lead to poor bonding, water ingress, and product failure. Product failures resulting from failure to strictly follow field cut instructions are not covered by any product warranty. **AVERTISSEMENT:** Le capuchon d'extrémité doit créer un joint étanche à l'eau. Tous les débris doivent être enlevés pour favoriser une bonne liaison du capuchon et éviter les pannes électriques. L'utilisation d'autres types de scies et / ou l'utilisation d'une lame émoussée peut entraîner l'écaillement ou la fissuration de l'extrusion ou créer une coupe qui ne peut pas être scellée, entraînant une défaillance du produit. Assurez-vous que la surface de collage par extrusion est propre. Les contaminants ou tout adhésif autre que Weld-On 16 sur cette surface peuvent entraîner une mauvaise adhérence, une infiltration d'eau et une défaillance du produit. Les défaillances du produit résultant du non-respect scrupuleux des instructions de découpe sur site ne sont couvertes par aucune garantie du produit.

Troubleshooting

NOTE: A licensed electrician should perform all applicable steps.	
Entire SlimLINER leg does not light after complete installation.	Check connection from power supply lead to first section of SlimLINER. Make sure polarity of connections made at power supply lead, any jumper wire, and at first section are correct. All connections must be RED-to-RED and BLACK-to-BLACK.
Still does not light.	Disconnect SlimLINER from power supply. Check output voltage of power supply using a multimeter. The output voltage should be 12.0 VDC ± 0.5 VDC. If there is no output voltage, have a licensed electrician check input voltage. Make sure power supply is connected correctly and getting primary power. If power supply is connected properly and getting primary power and there is still no output voltage, replace power supply.
Still does not light.	If power supply is getting primary power, has the correct output, and no sections light, there may be a short in the secondary wiring. Check all connections and cap all loose wires.
The beginning of a leg lights, but entire leg does not light or lights intermittently.	The primary cause of a portion of a SlimLINER leg not lighting or lighting intermittently is a bad connection or reverse polarity connection between the sections that light and sections that don't light. Check this connection.
An entire power supply leg of SlimLINER is dim.	Ensure maximum number of feet (meters) has not been exceeded (see above 12 VDC Power Supply Capacity Chart). Check secondary voltage. If voltage is below 11.5 VDC, power supply leg may be overloaded.
One segment does not light, but all others in the leg light.	SlimLINER is designed so if one segment fails, it will not cause the entire leg to go out. If one segment does not light, but all others in the leg do, replace the entire section with a new one.

E215393 241542 RoHS Compliant

Customer service and technical support
principalsloan.com
325.227.4577
3490 Venture Dr., San Angelo, TX 76905

PRINCIPAL SLOAN
A Principal Industries Company