SIGNBOX 3

Installation Guide for 701946-(X)WDLS1, 701946-(X)WSLS1, and 701946-(X)WSLT1

WARNING: Risk of electrical shock. New installation and LED Retrofit Kit installation requires knowledge of sign electrical systems. If not qualified, do not attempt installation. Contact a qualified electrician. Follow all NEC and local codes. SignBOX 3 is not suitable for submersion or direct exposure to water for extended periods of time. **AVERTISSEMENT:** Risque de choc électrique. La nouvelle installation et l'installation du kit de modification à LED nécessitent la connaissance des systèmes électriques de signalisation. Si non qualifié, ne tentez pas l'installation. Contactez un électricien qualifié. Suivez tous les codes NEC et locaux. SignBOX 3 ne convient pas à la submersion ni à l'exposition directe à l'eau pendant de longues périodes.

For New Installation, proceed with Step 1 below. For Retrofit Installations, begin with Retrofit Instructions on page 4.

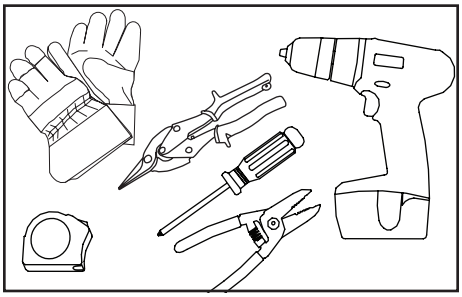

Tools required: Measuring tape, wire strippers, gloves, cutting tool (sheet metal shears/snips, scissors, utility knife), drill, and screwdriver.

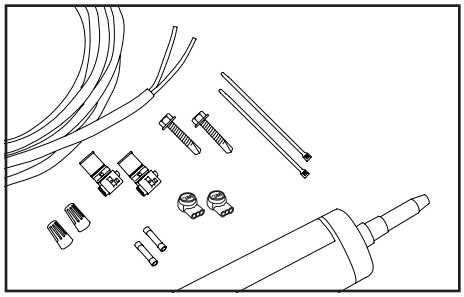

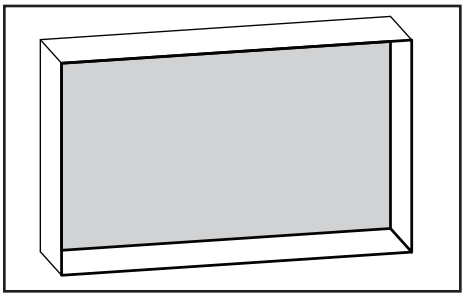

Layout: To populate sign, refer to SignBOX 3 Module density guidelines, test, or contact your Principal Sloan Representative for recommendations.

Components list:

- SignBOX 3 assemblies:
  - Double-sided assemblies: model numbers 701946-(X)WDLS1
  - Single-sided assemblies: model numbers 701972-(X)WSLS1
  - Single-sided module: model numbers 701972-(X)WSLT1
- 24 V Class 2 output power supply
- UL approved 18 AWG, or larger diameter supply wire
- UL approved wire connectors appropriate for wire gauge used
- SignBOX 3 mounting hardware (for 701946-(X)WDLS1 and 701946-(X)WSLS1 Assemblies): Clips (P/N 402106), Brackets (P/N 402107) (optional), and Couplers (P/N 402108) (as needed).
  - #8 (M4) self-drilling/self-tapping tek screws (required to pierce through strap), minimum length 0.625"
  - Optional: Electrical grade silicone, nylon zip ties, double stick mounting tape

Single and Double-sided Installations Using Part numbers 701946-(X)WDLS1 or 701946-(X)WSLS1

New Installation

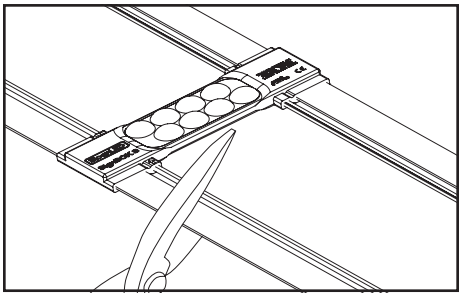

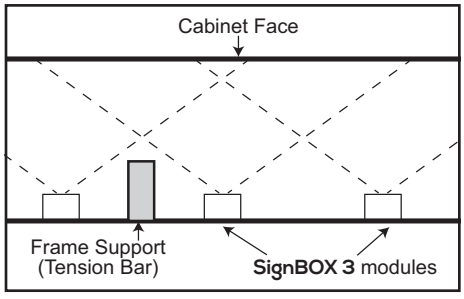

NOTE: To minimize potential for shadows in applications when using frame support tubes, mount modules or frame support tubes such that tubes are centered in between modules and at a depth that will not directly interfere with beam angle of LEDs. Use SignComp Adjustable Frame Brace (P/N 5357) or equivalent.

1. **Cutting product:** Cut straps and wires between modules to obtain required length. **Tip:** *Before cutting wires, refer to Joining Product section.*

SIGNBOX 3

Installation Guide for 701946-(X)WDLS1, 701946-(X)WSLS1, and 701946-(X)WSLT1

Joining Product

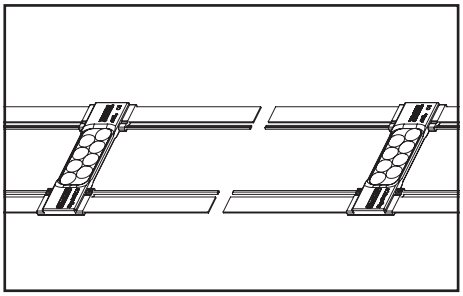

2. When cutting wires between modules, leaving one side longer will aid in joining product where needed. If, however, wires are not long enough for connections, use either jumper wires or remove a module to maximize wire length.

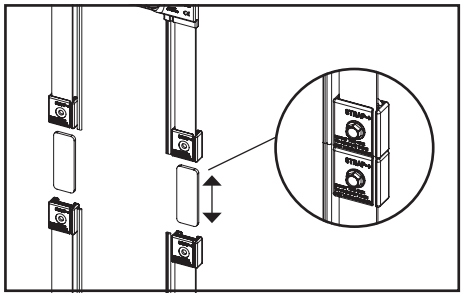

3. Use SignBOX 3 Clips (P/N 402106) and SignBOX 3 Couplers (P/N 402108) to join shorter pieces of product to required length. Insert straps from both sides of modules into clips (track features facing same direction). Slide onto couplers, and secure to them with #8 (M4) tek screws. Connect wires.

   Tip: *Use pliers to help hold parts during assembly.*

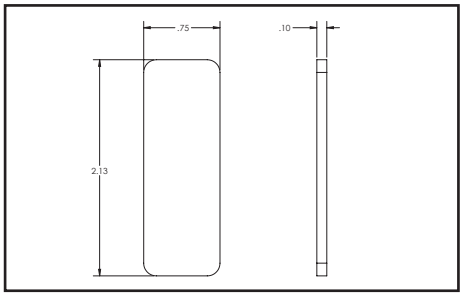

SignBOX 3 Coupler dimensions: 2.125" x 0.75" x 0.10".

Structural Support Guidelines for SignBOX 3

Vertical mounting: space supports at even intervals, but no further apart than 8 ft.
Horizontal mounting: space supports at even intervals, but no further apart than 4 ft.

Mounting Product

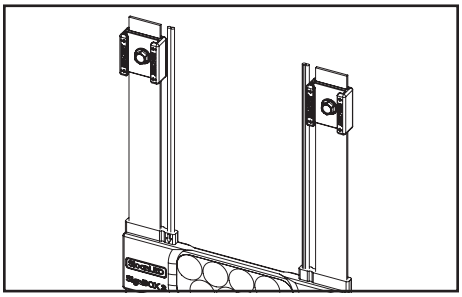

4a. **Mounting modules with SignBOX 3 Clips (P/N 402106) directly to cabinet structure:** Insert straps from both sides of module into clips (bracket tracks facing away from mounting surface) and secure to cabinet structure using #8 (M4) tek screws*. Repeat on opposite end making sure product is taut.

* Refer to Density Guidelines to determine SignBOX 3 product and installation method.

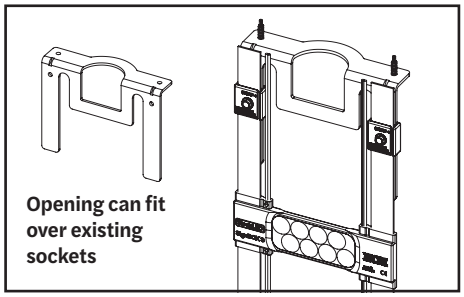

4b. **Mounting modules with SignBOX 3 Clips (P/N 402106) using SignBOX 3 Brackets (P/N 402107):** Install brackets 12" center-to-center along returns of cabinet*. Insert straps from both sides of module into clips (bracket tracks facing same direction). Slide onto bracket, and secure with #8 (M4) tek screws. Repeat on opposite end making sure product is taut.

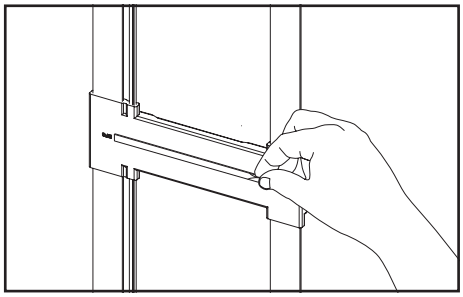

4c. **Optional mounting in single-sided cabinet with double stick tape:** Using non-oil based cleaner, clean all mounting surfaces of sign and bottom of modules for proper tape adhesion. With double stick tape on bottom of modules, mount to back of cabinet. Make sure product is taut. (Double stick tape not included.)

SIGNBOX 3

Installation Guide for 701946-(X)WDLS1, 701946-(X)WSLS1, and 701946-(X)WSLT1

Connecting Product to Power Supply

Single-sided option

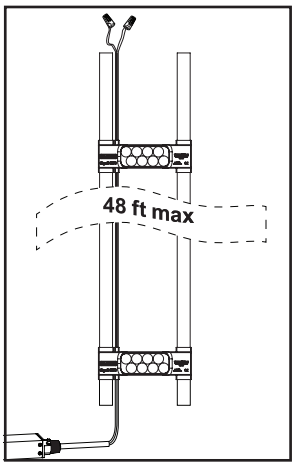

Double-sided options (arrows on modules indicate which wires power each side)

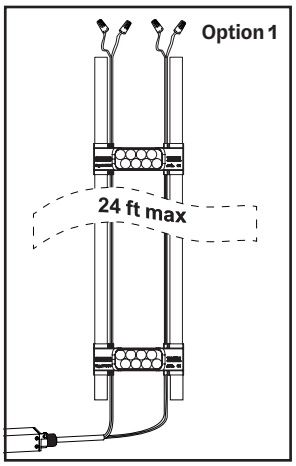

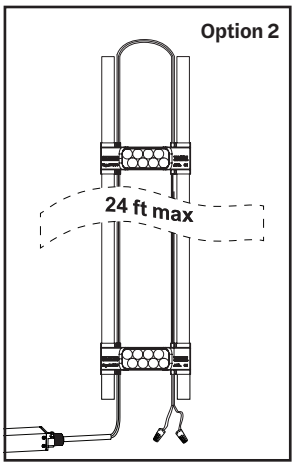

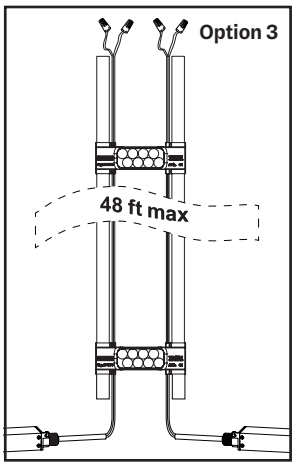

5. Using electrical connectors with appropriate safety agency markings, daisy chain product as required and connect to power supply as shown above. **CAUTION! Have a licensed electrician connect primary. ATTENTION! Demandez à un électricien agréé de connecter le primaire.** Modules may be connected in series* or parallel. End wires of SignBOX 3 should be capped and not tied back to power supply.

*For optimal performance, Principal Sloan recommends connecting no more than 24 module "sides" in series.

WARNING check polarity: All connections must be RED-TO-WHITE WITH RED STRIPE (+) and BLACK-TO-WHITE (-). Reverse polarity connections may damage LEDs and will void product warranty. **AVERTISSEMENT vérifier la polarité:** Toutes les connexions doivent être ROUGE-À-BLANCS avec une bande ROUGE (+) et NOIR À BLANC (-). Des connexions inversées peuvent endommager les DEL et annuler la garantie du produit.

Module Installations Using Part Number 701946-(X)WSLT1

Note: Modules must be mounted in an enclosed sign. This product is not suitable for immersion or direct exposure to water for extended periods of time.

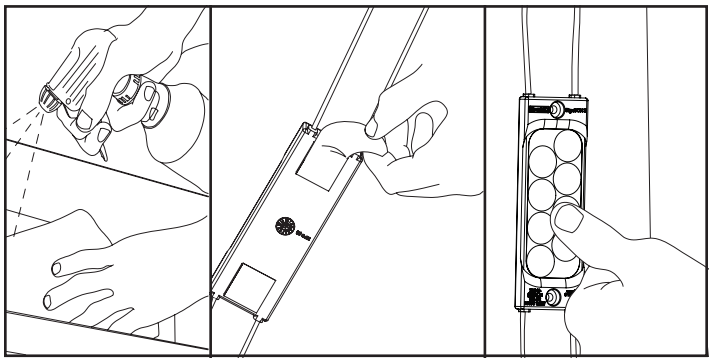

4. **Peel and stick:** Clean inside sign with rubbing alcohol and allow to dry. Using predetermined layout and LED placement from Step 3, remove tape backing and stick modules into place. Ensure modules are firmly attached.

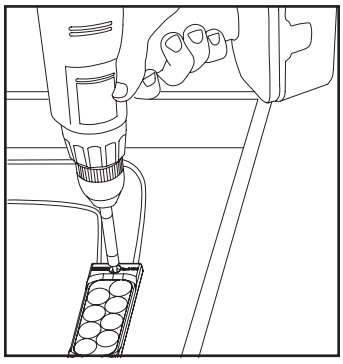

5. **Fasteners:** If desired, modules can be secured with #6 pan head sheet metal screws or 0.125" aluminum rivets.

SIGNBOX 3

Installation Guide for 701946-(X)WDLS1, 701946-(X)WSLS1, and 701946-(X)WSLT1

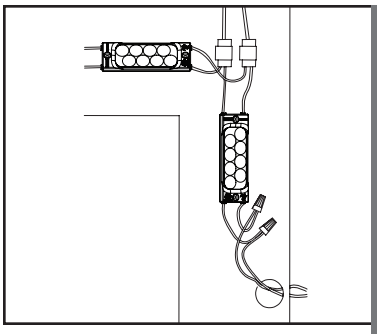

WARNING: Connect Red striped wire of LED modules (+) to Red wire of power supply (+). Connect White wire of LED modules (-) to Black wire of power supply (-). Reverse polarity connections may damage LEDs and will void product warranty. **ATTENTION:** Connecter le fil rayé rouge des modules LED (+) au fil rouge de l'alimentation (+). Connectez le fil blanc des modules LED (-) au fil noir de l'alimentation (-). Des connexions inversées peuvent endommager les DEL et annuler la garantie du produit.

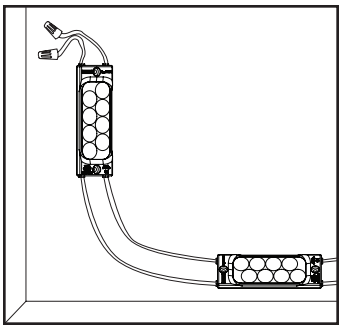

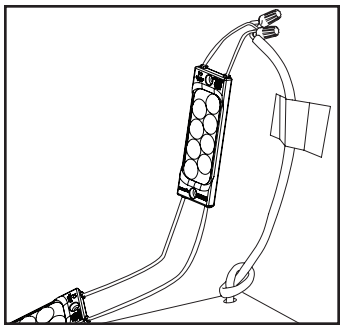

6. **Connections:** Modules may be connected in series* or parallel.

   *For optimal performance, Principal Sloan recommends connecting no more than 24 modules in series.

7. **Cap all unused wires:** The strand of modules should not be looped to create a closed circuit.

8. **Connect power supply to first module on string:** See power supply install guide for more information regarding power supply installation.

Retrofit Instructions for Existing Signs

GENERAL PURPOSE
RETROFIT SIGN CONVERSION.
FOR USE ONLY IN ACCORDANCE
WITH KIT INSTRUCTIONS.

KIT IS COMPLETE ONLY WHEN ALL PARTS REQUIRED BY THE INSTRUCTIONS ARE PRESENT.

WARNING: Risk of fire or electric shock. Install this kit only in host signs that have been identified in the installation instructions, and where the input rating of the retrofit kit does not exceed the input rating of the sign. Installation of this LED retrofit kit may involve drilling or punching of holes into the structure of the sign. Check for enclosed wiring and components to avoid damage to wiring and electrical parts. **AVERTISSEMENT:** Risque d'incendie ou de choc électrique. Installez ce kit uniquement sur les panneaux hôtes identifiés dans les instructions d'installation et dans lesquels les caractéristiques nominales d'entrée du kit de modification ne dépassent pas celles du panneau. L'installation de ce kit d'amélioration des LED peut impliquer de percer ou de percer des trous dans la structure de l'enseigne. Vérifiez le câblage et les composants inclus pour éviter d'endommager le câblage et les pièces électriques.

CAUTION: Turn off power to sign before inspecting or removing existing light source. Power must remain off while installing LED product. **ATTENTION:** Coupez l'alimentation générale du panneau avant d'intervenir ou de retirer la source lumineuse existante. L'alimentation générale doit être coupée tout au long de l'installation du kit de remplacement en LED.

1. Identify sign to be retrofit and ensure branch circuit supplying existing sign are within voltage range for LED power supply. Refer to components list (page 1) and "24 VDC Power Supply Capacity Chart" (page 5).
2. Remove existing lighting equipment intended to be replaced, such as neon or fluorescent, and all power supplies, transformers, or ballasts. Remove existing neon and all standoffs to leave an empty sign cabinet. **NOTE:** All materials removed must be disposed of in accordance with applicable local, state, and federal laws.
3. If required by local, state, or national electrical code, install a new disconnect switch.
4. Determine suitability and structural integrity of existing sign after removal of existing lighting equipment. If retrofit does not require the making of any new holes, do not make or alter any open holes in an enclosure of wiring or electrical components during kit installation. If existing holes are present in a wet or outdoor location sign, repair and seal any unused openings in the electrical enclosure. Openings greater than 0.5" diameter require a metal patch secured by screws or rivets and caulked with non-hardening caulk. Smaller openings may be sealed with non-hardening caulk.
5. Clean inside of sign using non-oil based cleaner. Follow all manufacturer's instructions and ensure inside of sign is dry before proceeding with installation. This is an important step for good adhesion of SignBOX 3 module mounting tape.
6. To populate sign, refer to SignBOX 3 density guidelines as well as power supply capacity chart (page 5) to determine appropriate number of modules and power supplies.
7. Follow all instructions on pages 1 through 4 under "New Installation" to properly install LED modules.
8. Connect modules to power supply output as shown on pages 3 and 4 under "New Installation".
9. Connect power supply input as outlined in power supply installation guide in accordance with local, state and national electrical codes by qualified personnel. Refer to power supply install guide included with power supply for details.
10. If required, install disconnect switch in accordance with local, state and national electrical codes by qualified personnel.

PRINCIPAL SLOAN
A Principal Industries Company

SIGNBOX 3

Installation Guide for 701946-(X)WDLS1, 701946-(X)WSLS1, and 701946-(X)WSLT1

24 VDC Power Supply Capacity Chart

Power output	Maximum SignBOX 3 single-sided modules, or one leg of double-sided	Maximum SignBOX 3 double-sided modules, both legs
60 W	28	14
96 W	48	24
3 × 96 W	3 × 48	3 × 24
100 W	48	24
Power used per ft in Watts	1.92 W	3.84 W

Capacities based on 90% of power supply output.

Extension of Power Supply Leads

If longer lead wire from power supply to LED modules is needed, an extension can be used. Extension should be kept as short as possible, i.e., under 15 ft for 18 AWG UL Listed PLTC or under 50 ft for 14 AWG UL Listed PLTC.

Troubleshooting:

Entire box/cabinet or product does not light after complete installation.	Check connection from power supply lead to first module. Make sure polarity of connections made at power supply lead and any jumper wire is correct. Power supply outputs should be connected RED-TO-WHITE WITH RED STRIPE and BLACK-TO-WHITE.
Still does not light.	Check output voltage of power supply using a voltmeter. The output voltage should be DC 24.0 V ± 0.5 V. If there is no output voltage, have a licensed electrician check input voltage. Make sure power supply is connected correctly and getting primary power. If power supply is connected properly and getting primary power and there is still no output voltage, try a different power supply.
Still does not light.	If power supply is getting primary power and modules don't light, there may be a short in the secondary wiring. Check all connections and cap all loose wires.
The beginning of a strip lights, but entire strip does not light or lights intermittently.	The primary cause of a portion of a SignBOX 3 leg not lighting or lighting intermittently is a bad connection or reverse polarity connection between modules that light and modules that don't light. Check this connection.
One module does not light, but all others in the product light.	SignBOX 3 is designed so if one module fails, it will not cause the entire box/cabinet or strip to go out. If one module does not light, but all others in the product do, replace this module with a new one.

E215393 241542 RoHS Compliant

US patents and foreign patents pending

Customer service and technical support
principalsloan.com
325.227.4577
3490 Venture Dr., San Angelo, TX 76905

PRINCIPAL SLOAN
A Principal Industries Company