HanleyLED

NRG 4 PRO

24 VDC

24V LED illumination for small channel letters

NRG SERIES

Specifications

SKU HLED-PN4-7K24

Beam angle ..... 170° High efficiency optics

Ideal depth ..... 3 - 15"

Power (W) ..... 1.44 W/mod (1.83 W/ft)

Color temperature ..... 7000 K

Efficacy ..... 170 lm/W

Lumens ..... 244 lm/mod (309 lm/ft)

Modules/ft ..... 1.27/ft (fully-stretched)

Environment ..... IP68 waterproof

Operating temp. ..... -40° C to +60° C

Storage temp. ..... -40° C to +70° C

Cascade ..... 40 mods single-ended power feed
80 mods double-ended power feed

Packaging ..... Anti-static bag, 40 modules (31 ft)/bag,
9 bags/inner carton, 18 bags/outer carton

Warranty ..... 10-Year Product/5-Year Limited Labor

c UL us E350828 · c UL us E487794 · RoHS Compliant

Exceptionally Bright: 69% Brighter Output

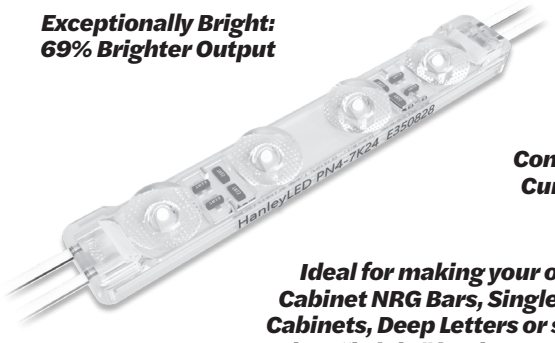

Constant Current

Ideal for making your own Cabinet NRG Bars, Single Face Cabinets, Deep Letters or simply when "bright" is what you need

Light Distribution

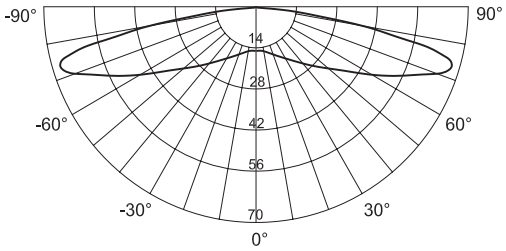

Power Supply Options

Product	35 W, 24V	60 W, 24V	96 W, 24V	100 W, 24V	150 W, 24V	240 W, 24V	288 W, 24V
NRG 4 Pro	24 mods	41 mods	66 mods	69 mods	104 mods	164 mods	128 mods

Dimensions

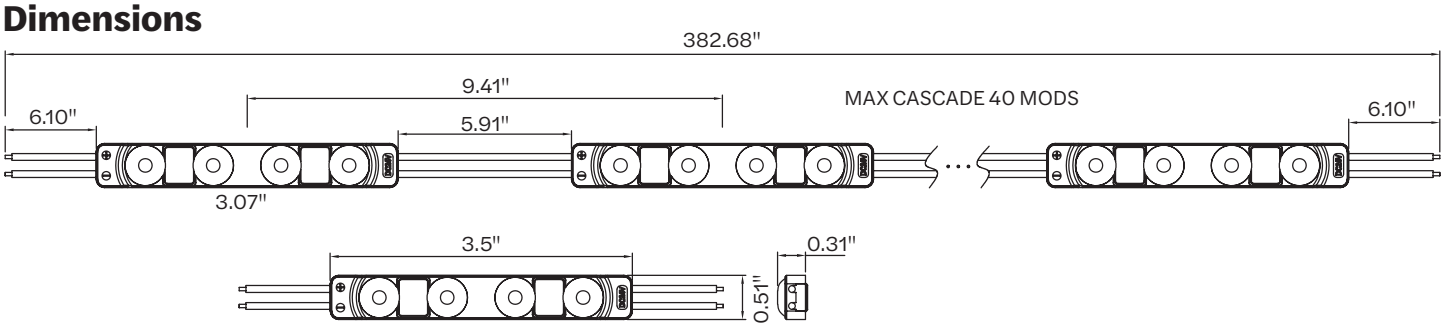

10|5 YEAR
10-Year Product | 5-Year Labor
WARRANTY

principalsloan.com
325.227.4577
3490 Venture Dr., San Angelo, TX 76905

© 2025 Principal Industries Rev B 2025-01-16 Specifications subject to change without notice.

PRINCIPAL SLOAN
A Principal Industries Company