FLEXIBRITE^{24}

Flexible LED tubing

FlexiBRITE Series



Specifications

Part number* ..... Ruby Red (5-ft) 701499E-R-5
Ruby Red (20-ft) 701499E-R-20
Citrus Orange (5-ft) ..... 701499E-O-5¶
Citrus Orange (20-ft) ..... 701499E-O-20¶
Noviol Gold (5-ft) ..... 701499E-Y-5¶
Noviol Gold (20-ft) ..... 701499E-Y-20¶
Emerald Green (5-ft) 701499E-G-5
Emerald Green (20-ft) 701499E-G-20
Bromo Blue (5-ft) 701499E-B-5
Bromo Blue (20-ft) 701499E-B-20
Snow White (5-ft) 701499E-W-5
Snow White (20-ft) 701499E-W-20

Dimensions ..... Width ..... 0.60"
Height ..... 1.01"
Lengths ..... **5-ft:** 59.06"
20-ft: 236.22"

In-field bends ..... Radial bend ..... 12.0"
Flat bend ..... 1.0"



Flat bend Radial bend

Cut increments ..... 2.0"

Colors* ..... Ruby Red, Citrus Orange¶, Noviol Gold¶, Emerald Green, Bromo Blue

Operating temperature ..... -40° C to +70° C

Protection class IP66

Special feature ..... Hook-up wires every 12.0"

Mounting ..... Mounting Clips ..... 402888-25 (Box of 25)
Mounting Track ..... 402889-10 (Box of 10)

Packaging ..... **5-ft:** 1 assembly per carton, 32 cartons per case
20-ft: 1 assembly per carton, 8 cartons per case

* See "Unlit product color chart" for Pantone color equivalents.

¶ Availability limited: Call to confirm.

E215393

Accessories

Accessories not included with FlexiBRITE^{24}, must be ordered separately.



Description	Part number	Quantity
Endcaps, Snow White (inserts included)	402884-10	Bag of 10
Endcaps, Ruby Red (inserts not needed)	402884-R-10	Bag of 10
Endcaps, Citrus Orange (inserts not needed)	402884-O-10	Bag of 10
Endcaps, Noviol Gold (inserts not needed)	402884-Y-10	Bag of 10
Endcaps, Emerald Green (inserts not needed)	402884-G-10	Bag of 10
Endcaps, Bromo Blue (inserts not needed)	402884-B-10	Bag of 10



Joint Kit
for sealing joints on INDOOR installations ONLY
701491-FB
Contains enough Loctite primer # 770, Loctite glue # 406 to seal 3 to 5 joints.



Mounting Clips
402888-25
Bag of 25

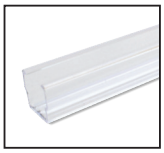

Mounting Track, 59" (4.9')
402889-10
Bag of 10

Power Supply Options

24 VDC Power supply†	All colors Maximum feet
60 W	19.7
100 W	32.8
Power used per foot in Watts	2.7

† Configured for Class 2 Output.

NOTE: When mixing modules of different sizes/colors or various products on the same power supply, simply add all the power requirements for the respective lengths of each product. Then choose appropriate power supplies to provide adequate power output. The actual number of power supplies needed may vary based on how the materials are distributed across the project.

Unlit Product Color Chart

Ruby Red **PANTONE 1788 C**	Citrus Orange **PANTONE 172 C**	Noviol Gold **PANTONE 115 C**
Emerald Green **PANTONE 339 C**	Bromo Blue **PANTONE 3005 C**	

FlexiBRITE is covered by US and foreign patents pending and covered by the following US patents issued: 6,776,504 and 7,213,941 and European Patent No. 1756471

PRINCIPAL SLOAN
A Principal Industries Company

FLEXIBRITE[24]

Flexible LED tubing

FlexiBRITE Series

Transition Guide

12 VDC Part number	Length	Color	24 VDC Part number	Length
701499-R-2	2-ft	Ruby Red	701499E-R-5	5-ft
701499-R-10	10-ft		701499E-R-20	20-ft
701499C-O-2	2-ft	Citrus Orange	701499E-O-5¶	5-ft
701499C-O-10	10-ft		701499E-O-20¶	20-ft
701499C-Y-2	2-ft	Noviol Gold	701499E-Y-5	5-ft
701499C-Y-10	10-ft		701499E-Y-20	20-ft
701499D-G-2	2-ft	Emerald Green	701499E-G-5	5-ft
701499D-G-10	10-ft		701499E-G-20	20-ft
701499D-B-2	2-ft	Bromo Blue	701499E-B-5	5-ft
701499D-B-10	10-ft		701499E-B-20	20-ft
701499D-W-2	2-ft	Snow White	701499E-W-5	5-ft
701499D-W-10	10-ft		701499E-W-20	20-ft

Dimensions

FlexiBRITE[24]

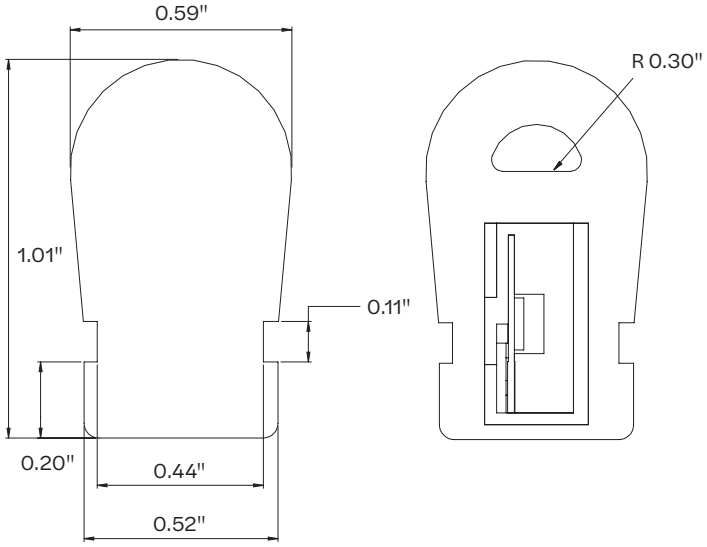

Mounting track
P/N: 402889

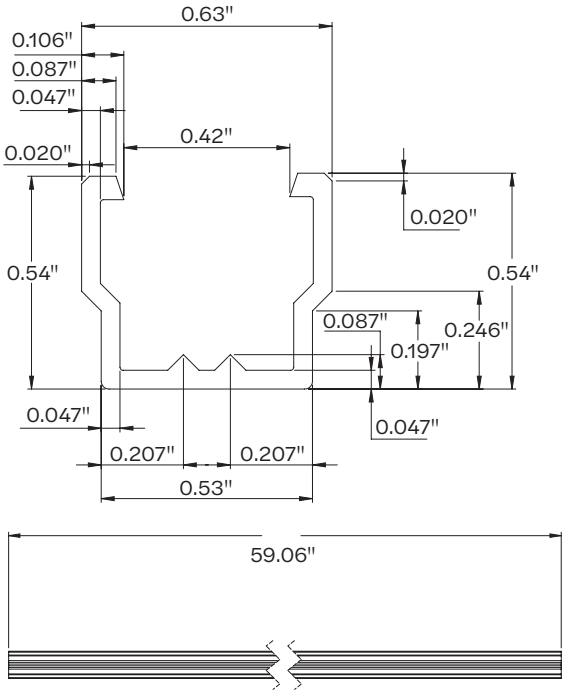

pindustries.com
325.227.4577
3490 Venture Dr., San Angelo, TX 76905

© 2026 Principal Industries Rev D 2026-01-22

Specifications subject to change without notice.

PRINCIPAL SLOAN
A Principal Industries Company