60C3D 60W 12VDC POWER SUPPLY



Specifications

SKU 701507-60C3D

Warranty ..... 5-year product/5-year limited labor

Performance

Rated input voltage ..... 100~277 VAC

Max. input voltage ..... 108-305 VAC

Frequency ..... 50-60 Hz

Rated input current ..... 0.8 A max.

Inrush current ..... 70 A max. @ 277 VAC, 60 Hz

Efficiency ..... >88% @ 120 VAC

Power factor ..... >0.95 @ 240 VAC (full-load)
>0.90 @ 277 VAC (65% load)

THD ..... <20% @ 120-277 VAC (full-load)
<20% @ 277 VAC (65% load)

Rated output voltage ..... 12 VDC

Rated output current ..... 5 ADC

Max. output power ..... 60 W

Line regulation ..... <1%

Load regulation ..... <3%

E336107
E215393

E336107

RoHS Compliant

Safety

Over current ..... Yes, auto-recovery

Over temperature ..... Yes, 100° to 110° C case, auto-recovery

Short circuit ..... Yes, auto-recovery

Surge immunity ..... Line – Earth –> 4 kV
Line – Neutral –> 2 kV

Dimming

Dimming method ..... Integrated 0-10 V, PWM and resistor

Minimum dimming level 1%

Current consumption ..... 0.1 mA sourcing

Environmental

IP rating IP64

Maximum case temp. ..... 90° C

Operating ambient temp. ..... -40°~+60° C, derated up to 70° C with 50% of load

Storage temp. ..... -40°~+85° C

Lifetime ..... 25,000 hours @ +60° C ambient with 100 % load

Compliance

Safety standard ..... UL8750 Class P Listed, UL879/879A, CE

EMI standard EN55015

Harmonic current emission ..... IEC/EN61000-3-2 Class C

Surge IEC/EN61000-4-5

Dimensions

Weight: 0.71 lbs

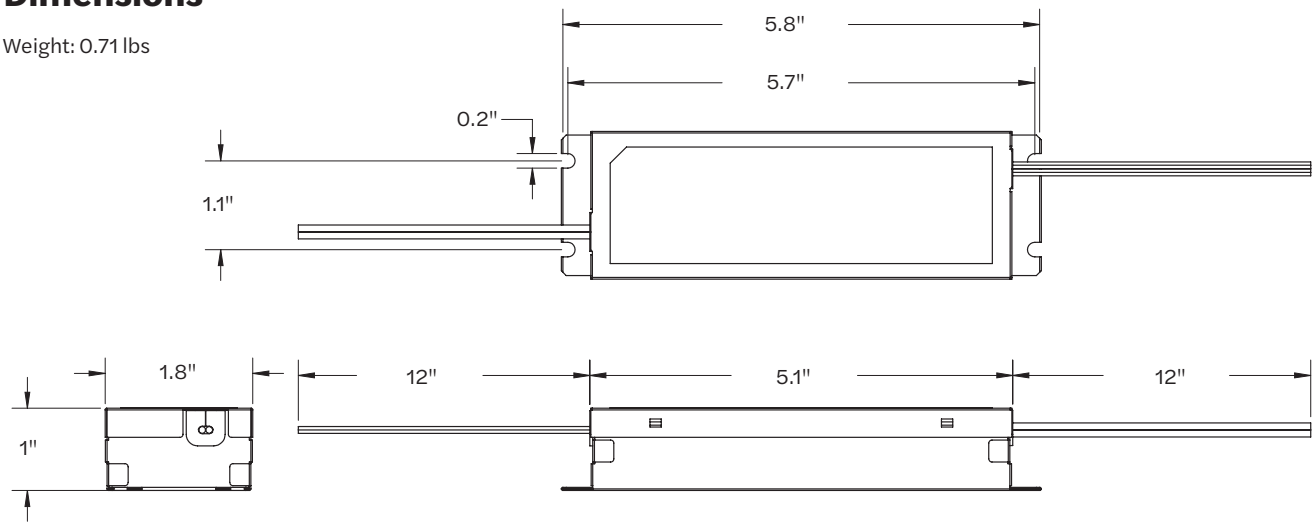

In the end application, the maximum case temperature (Tc) shall not be exceeded 90° C.
The product is intended for IP64 environment.

Specifications subject to change without notice.

PRINCIPAL SLOAN
A Principal Industries Company

60C3D 60W 12VDC POWER SUPPLY

Efficiency

Vin: 120 VAC

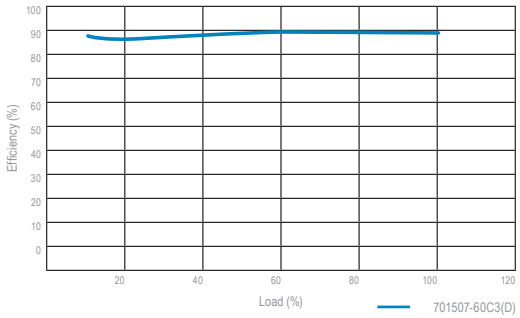

Vin: 240 VAC

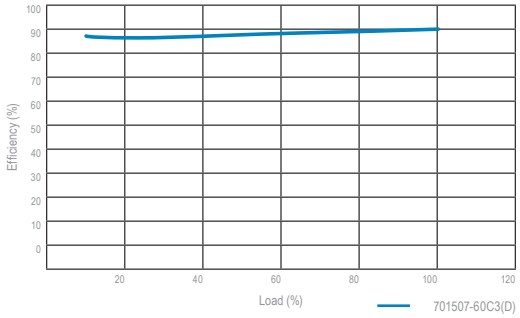

Dimming chart (Voltage dimming)

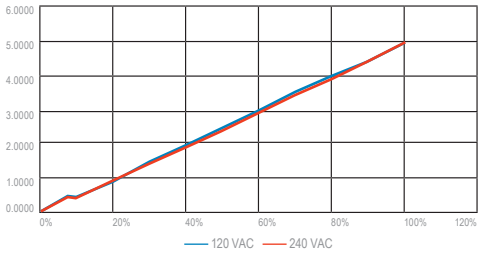

Dimming chart (PWM dimming)

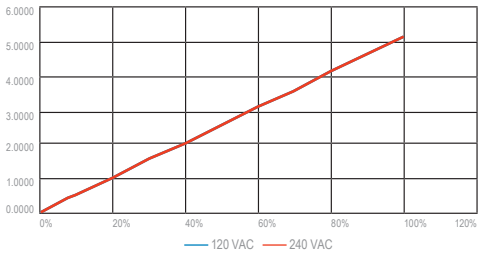

Dimming chart (Resistor dimming)

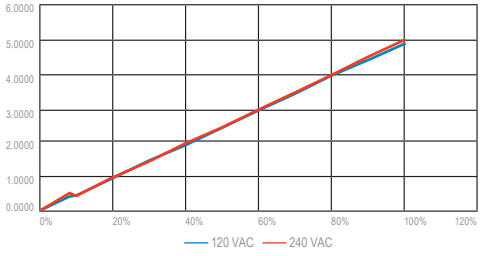

Wire Gauge Distance Chart for Power Limited Tray Cable (PLTC)

When the distance increases between the secondary side of the power supply and the first LED in a letter or the beginning of a tubing run, the gauge or wire needed will change as follows:

Distance from power supply	Wire gauge
0 to 15 ft	18
15 to 50 ft	14
50 to 100 ft	12
100 to 150 ft	10

Power supply output lead length.....12"

Wiring Diagram

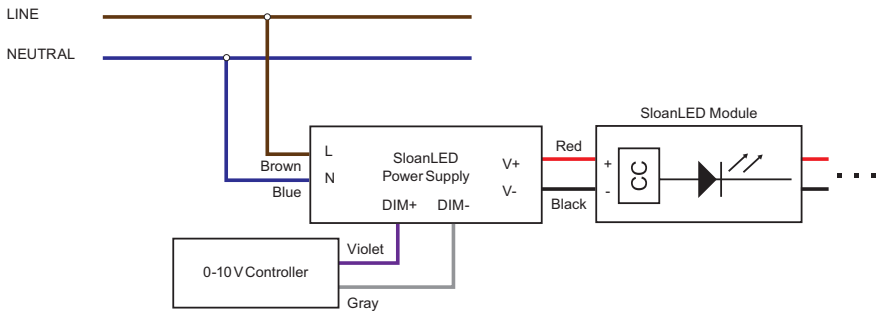

5 YEAR Product & Labor WARRANTY

principalsloan.com
325.227.4577
3490 Venture Dr., San Angelo, TX 76905

© 2025 Principal Industries Rev B 2025-03-10 Specifications subject to change without notice.

PRINCIPAL SLOAN
A Principal Industries Company