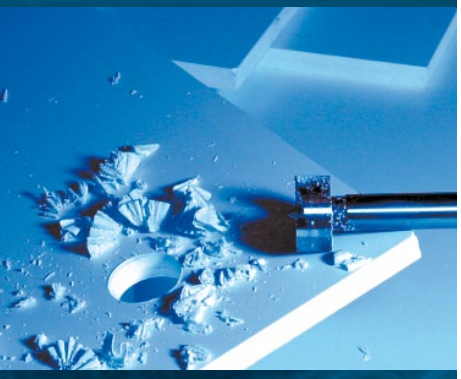

KÖMMERLING®
Business Unit Sheets

Working Guidelines and Application Outdoors

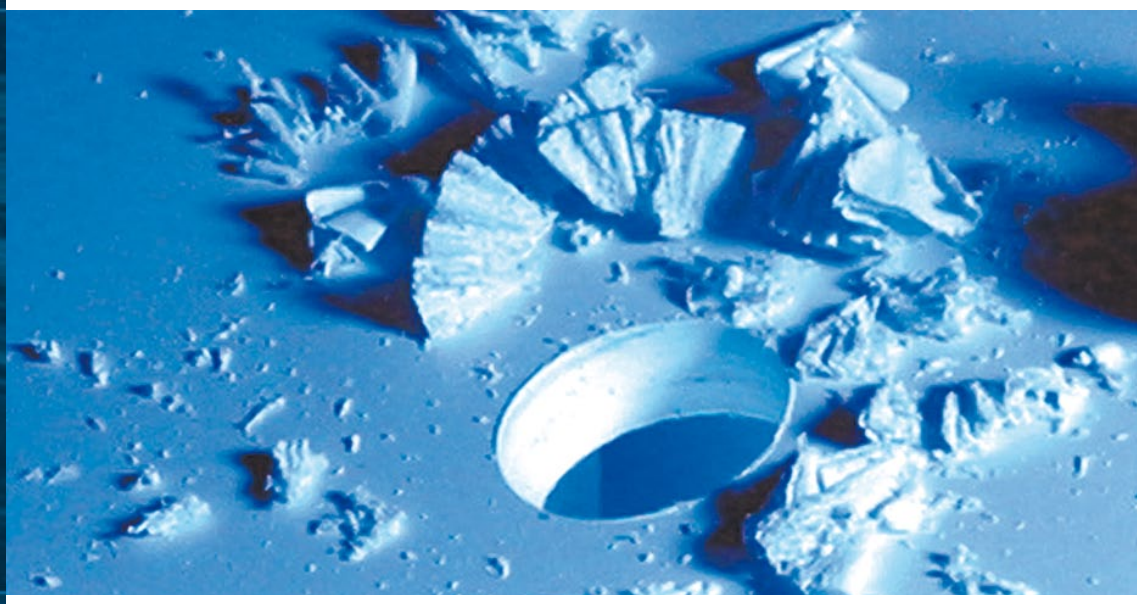

Working guidelines for PVC-U sheets

KÖMACEL® KÖMATEX NEW® KÖMAPRINT® KÖMADUR®

When working with PVC-U sheets, there is a number of special guidelines and directions that must be complied with. The following data and values are provided for orientation purposes. Although they have been obtained by conducting a great variety of trials and tests, they cannot be assumed to be binding for every type of application.

Almost all tools and machine tools used to work metal and wood can also be used to work our KömaCel, KömaTex NEW, KömaPrint and KömaDur PVC-U sheets. The cutting speeds are high, the feed rate low and the cutting depth also low. In most cases, there is no need to cool either the cutting tools or the cuts themselves, provided that the cutting edges of the tools are kept sharp and the heat that arises through the cutting process is dissipated by quickly removing the chips. If the depth of the cut is deeper, the cut will have to be cooled in order to prevent the material from "smearing": this can be done using compressed air or water (cooling medium).

Furthermore, the existing safety instructions also require that chips and dust be properly extracted.

Please note that whichever method is chosen to work the material, deep grooves and sharp edges must be avoided as they would lead to early breakage of the material due to the known notching effect when put under strain. Smooth surfaces at the edges can be obtained by finishing them with buffing wheels made of felt, unbleached calico or sisal weave, or with felt tapes. Grinding or polishing pastes can also be used. Uneven edges that arise during sawing, drilling or milling can be given a clean finish using flat scrapers (grinding angle 15°).

Guideline values regarding the cutting conditions and shapes of cuts and sections in connection with the working processes described below can be found in the table on page 15; for further details, see VDI Specification 2003.

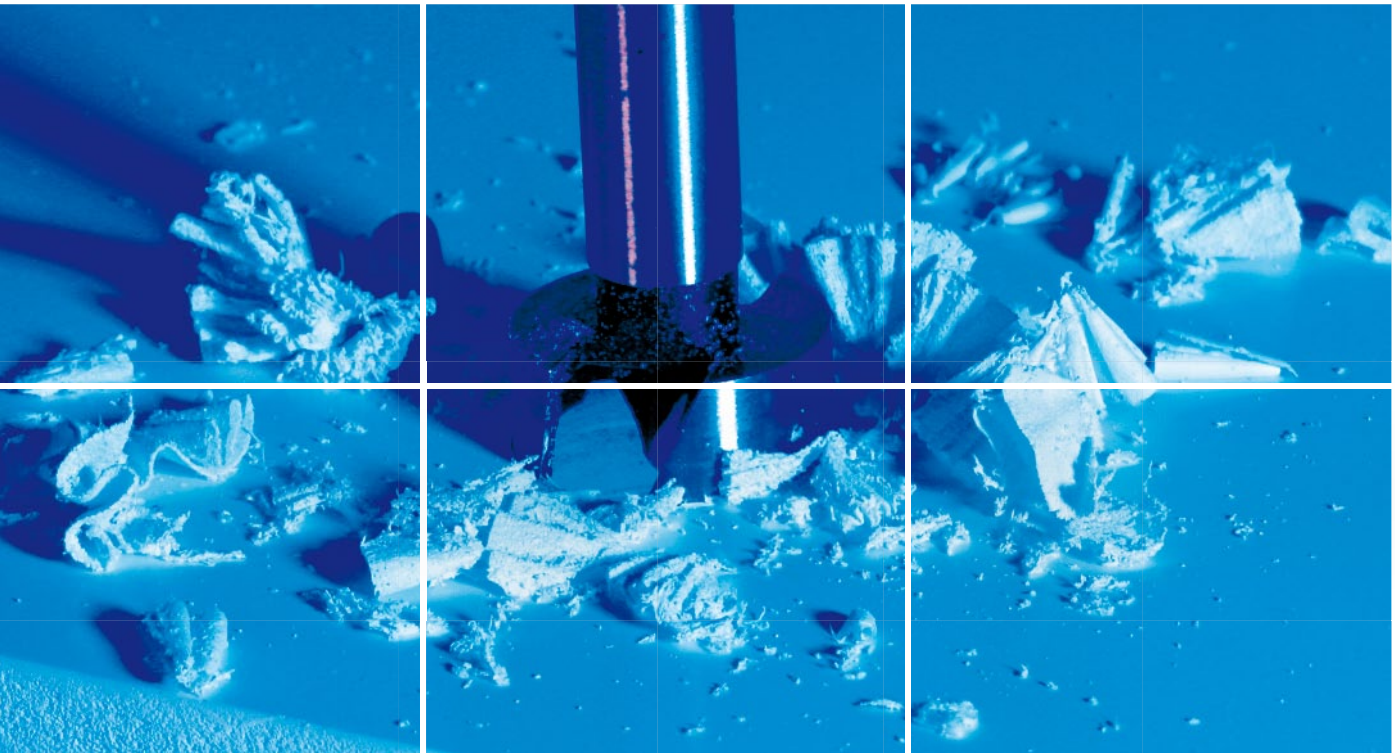



Machining

Sawing

High-speed bandsaws and circular saws with a cutting speed of up to 3000 m/min are recommended. Depending on the thickness of the sheets, saw blades with a tooth pitch of between 5 and 10 mm are used. For circular saws, it is normally recommended to use blades with a tooth geometry that alternates between flat teeth, trapezoidal teeth and carbide-tipped teeth.

The saw blade diameter (Ø) and the number of teeth (t) must be coordinated to match the material to be machined, the machine type and the machine speed (e.g. KömaCel Ø 300 mm, t 96, speed 4000–5000 rpm, horizontal or vertical panel saw).

In order to obtain clean edges to cuts and to avoid cracking, always clamp the sheet material in the work-holding fixture in such a way that it does not vibrate.

This is especially important for thin sheets with a thickness of 1–3 mm, not only when machining them singly but also in a stack. Use guillotine shears to cut a thickness of 1 mm.

In the case of jigsaws, use only sharpened, unset saw blades (plastics, PVC-U). The feed (manual) must be at a slow, constant speed.

In particular cases, it may be advisable to make use of the consulting service offered by the saw-blade manufacturer.

Information about the cutting geometry of the machining processes can be found in the table on page 15. The information and instructions given by the respective machine manufacturer must of course be observed.

Drilling

All PVC-U sheets in question can be drilled using the sort of twist drills familiar from drilling metals (DIN 1412 twist drills) whose angle of twist is approx. 30°. The point (or nose) angle can be up to approx. 110°, while the lip relief angle should be no smaller than 12–16°.

The cutting and feed speeds depend on the depth of the hole to be drilled: the thicker the sheet, the slower the speed.

For holes larger than 20 mm in diameter, two-flute cutters with pilots are used. Holes larger than 40 mm in diameter are cut using circular cutters (e.g. quick-helix drills).

Turning

When rough turning, it is advisable to combine a slow feed rate with a greater cutting depth and to use a cutting tip with a radius of at least 0.5 mm in order to obtain a groove-free surface.

The cutting depth should be max. 2 mm for fine turning. If a faster feed rate is selected, cracking of the material can be avoided by setting a slower cutting speed.

Milling

The milling tools have to be ground so that they are suitable for working the plastic material. They must also provide enough space for an adequate volume of chips. Working with a fast forward feed rate along with moderate cutting speed and deep cuts will lead to good results. 3-D milling can also be performed without any problem with KömaCel, KömaTex[NEW], KömaPrint and KömaDur. For this purpose, the plotter system is equipped with a special ballnose end mill and linked with suitable computer software.

Cutting, punching, perforating

KömaDur sheets up to 3 mm thick can be cut with guillotine (sheet) shears. The cut must be made swiftly and without interruption. The sheets should have room temperature, i.e. at least 20 °C. Thicker sheets (⇢ 3 mm) should be cut using a saw.

KömaTex[NEW], KömaPrint and KömaDur sheets up to 3 mm thick can be punched and perforated with profiling knives or two-piece tools. Also recommended are punching tools (made of strip steel) with facet cut (bevelled edge) on both sides. Heating the PVC-U material to 30 to 40 °C is useful and aids the working process.

Laser cutting

Due to the heat that is transferred to the material during laser cutting, this process is unsuitable for rigid foam sheets.

Water-jet cutting

An alternative cutting technology (cold-cutting process) is water-jet cutting.

This cutting method is especially suitable for KömaCel, KömaTex[NEW], KömaPrint and KömaDur when complex contours are to be cut out.

Up to a sheet thickness of 3 mm, cutting can be performed using a pure water jet. For thicknesses of 4 mm and more, however, an abrasive agent (e.g. silica sand) should be added to the cutting water.

Different cutting speeds can be used depending on the type and thickness of the sheet and the type and quality of the cutting unit. The cutting speed depends mainly on the quality of the cutting surface wanted and should perhaps be discussed and agreed upon with the customer.

At the beginning of every series, therefore, we advise you to first of all determine the correct cutting speed with respect to the quality of the cutting surface.

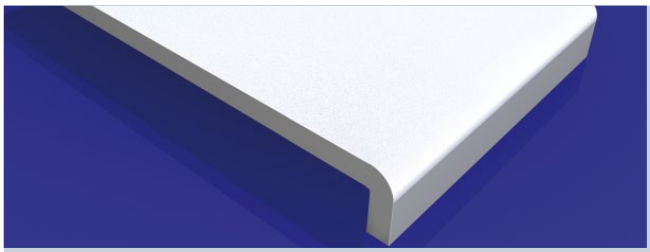

Forming (non-cutting shaping)

KÖMATEX[NEW] KÖMADUR®

KömaTex[NEW] and KömaDur PVC-U sheets can be formed, i.e. worked or shaped without cutting, by means of a number of different processes: by folding, bending, compression moulding, upsetting, stretch forming and thermoforming.

The diagram below shows that the forming properties of KömaDur PVC-U sheets are dependent on the temperature. These properties are of practical importance with regard to workability and use of the sheets. The modulus of elasticity and the tensile strength indicate the deformation resistance, the elongation at tear and the deformability of the material at the respective temperature.

Usually, the sheets are formed during the elastic-plastic phase of the material, in which maximum degrees of expansion/elongation are reached and the forces required for forming can be kept low.

In order to prevent damage to their structure, KömaTex[NEW] and KömaDur sheets must not be formed at and below the softening temperature, i.e. at temperatures below 90 °C. The most favourable temperature range for each of the various hot-working processes depends on the sheet material and application (cf. table on page 7).

Good forming is possible only when the sheet material is thoroughly and homogeneously heated. The sheets are preferably heated using infrared heaters, but heating ovens or circulating-air ovens can also be used. During folding processes, for example, the sheets require localised heating, for which heating elements can be used.

Furthermore, we recommend sheets 3 mm thick and more be heated on both sides in order to avoid damage to the one surface through overheating and to shorten the heating time.

Diagram of the forming properties of amorphous thermoplastic materials

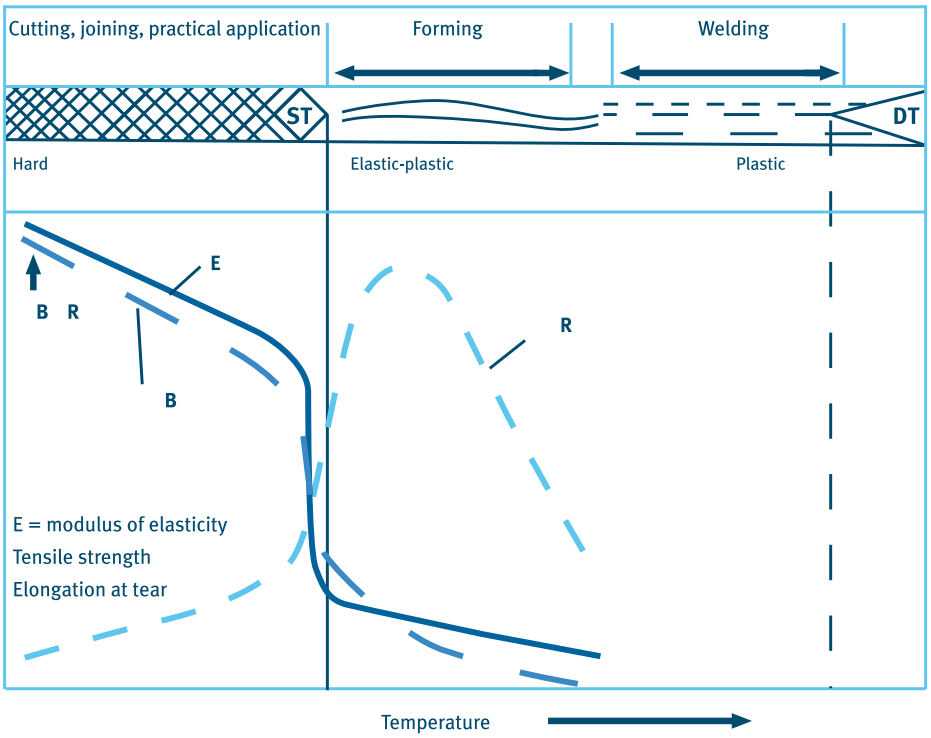

ST = softening temperature, for KömaDur appr. 95 °C.
DT = decomposition temperature, dependent on the temperature induction period, for KömaDur appr. 220 °C after max. 1 minute.

Thermoforming and stretch forming

KömaDur and KömaTex[NEW] sheets can be thermoformed or stretch-formed on all commercially available forming machines. The only proviso is that the machines are protected against draughts on all sides.

Fast working cycle times can be achieved if the tools used for these forming processes are cooled. In the case of vacuum forming, sand-blasted surfaces have the advantage that the air can be completely extracted without leaving any air pockets. The diameter of the vacuum bores should not exceed 0.8 mm in order to prevent deformation of the drill holes. The edges should generally be rounded with a radius that is no more than between one and three times the thickness of the sheet.

In the case of KömaDur and KömaTex[NEW] sheets, male moulds must be sufficiently conical: approx. 5°. Female moulds do not need to be conical as the thermoformed parts separate from the mould as they cool down.

Cooling is generally carried out using compressed air. Compressed air combined with sprayed water, however, must not be used until the surfaces have hardened.

Of the various thermo and stretch-forming processes, particular mention should be made of the air-slip processes in which the heated sheets are pre-stretched pneumatically, i.e. by air. These processes are the ones that generally produce thermoformed parts with the most uniform material thickness.

In this connection, it is important to mention that the forming process of the material stops wherever the PVC-U sheet touches something (the mould).

Thermoformed parts will for the most part not warp if the forming temperature is high, the parts are cooled down slowly, the moulds are opened at rather low temperatures and the rims are trimmed immediately after the parts have been removed from the moulds. For the forming process itself and the design of the moulds, the shrinkage of sheets has to be taken into account. KömaTex[NEW] and KömaDur sheets can shrink by up to 0.5%, particularly in the direction of extrusion.

KömaCel in the thicknesses 4, 5 and 6 mm can also be thermoformed. Due to their characteristics, however, the ability of the thicker KömaCel sheets to be thermoformed is restricted. Deformations under thermal impact are possible to a limited degree (e.g. bending, folding with notch, etc.).

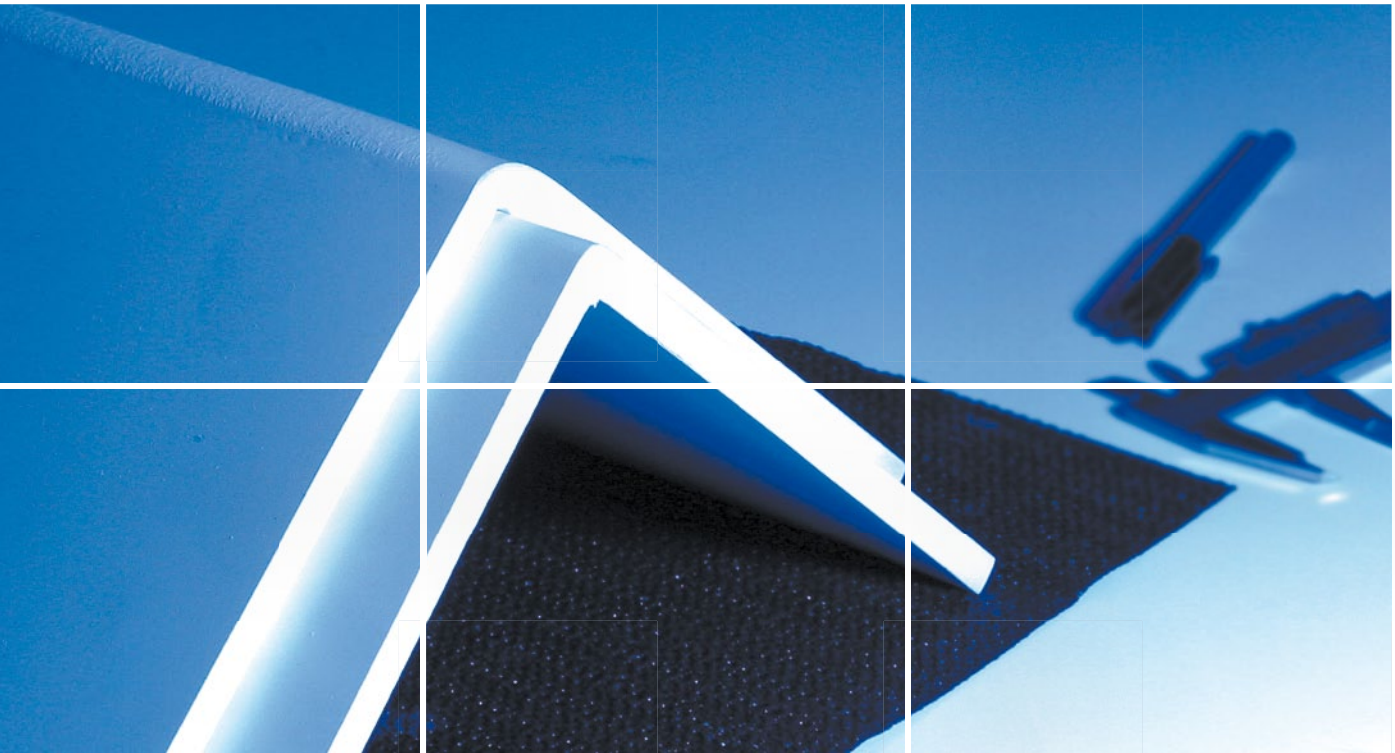

Folding, bending, compression moulding

Folding and bending of the PVC-U sheets must only be performed on suitable equipment. The bending radius must never be smaller than two to three times the thickness of the sheet. The heated zone should have a width of at least five times the thickness of the sheet.

After cooling, linear heating of the material will lead to stresses developing within the PVC-U, which cause warping when folding short lengths.

Sides with a length 20 times the thickness of the sheet will not warp. For this reason, we recommend you heat up the entire section in order to prevent short sides from warping.

Folds with a relatively small radius can be made by notching (V-notch) the inner side.

Hot-folding of sheets

To prevent the cell structure from being stretched to too great a degree, a minimum bending radius of approximately twice the thickness of the sheet must be observed. In the case of PVC sheets 8 mm or thicker, please remove the excess material by milling a V-shaped groove along the inside of the bending edge before bending. You can then carefully heat up the outside of the bending edge, bend up a fold and bond the joint created. However, a remaining thickness of 1 to 2 mm must be left in the rigid foam sheets. When milling, make sure that the V-shaped groove is 1° larger than the desired bending angle, i.e. 91° in the case of a 90° angle.

Cold-bending of sheets

The minimum bending radius when cold-bending rigid foam sheets is roughly 100 times the thickness of the sheet, that is, 200 mm for a 2 mm-thick sheet. To cold-bend thick sheets, use a bench saw to saw around ten parallel grooves into the sheet with a clearance between them the width of the saw blade, leaving a remaining thickness of 1 to 2 mm. You can also use this method to bend thick sheets to any desired angle without heating them.

Embossing

Impressions such as letters, characters, numbers and ciphers are embossed with tools familiar from sheet-metal working and the cardboard and leather industries. The tools must be preheated: for working KömaCel, KömaTex[NEW] and KömaDur, temperatures up to around 100–130 °C are recommended.

The actual embossing process generally does not require the sheet material to be heated.
Further information and useful advice on forming PVC-U sheets can be found in VDI specifi cation 2008, pages 1 to 3.

Hot-working processes

Material	Folding, bending, compression moulding, thermoforming	
KömaCel	approx. 130 °C	with restrictions
KömaTex[NEW]	approx. 130 °C	120–150 °C
KömaDur M, ES, H, D	120–140 °C	135–180 °C

Table: standard hot-working temperatures for forming (non-cutting shaping).

NB: If the material is heated above 180 °C, it initially leads to discoloration and then to thermal damage. Avoid forming rigid foam sheets at temperatures below 120 °C in order not to damage the cell structure.

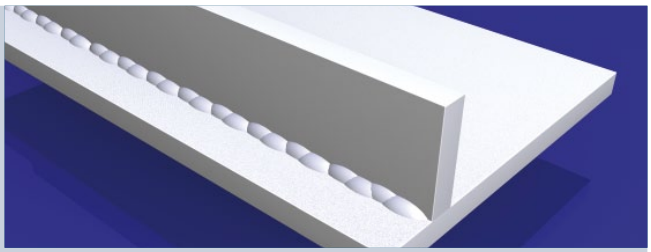

Welding

KÖMACEL® KÖMATEX NEW® KÖMADUR®

KömaCel, KömaTex[NEW] and KömaDur are made of thermoplastic materials. The sheets can be welded by means of familiar welding processes, such as hot-gas welding, heated-tool welding, folding and welding and friction welding, and using all pieces of equipment commonly available on the market.

Please always make sure before welding that the sheets in the welding zone have been properly cleaned with a cleaning agent or, better still, by machining.

After the welding process and depending upon the kind of product and application, you have to decide whether the weld seams need finishing or not. Filing, planing, grinding or smoothing are suitable methods to finish the weld seams. In all cases, it is important to work with care in order to avoid notching. Please take great care with KömaCel and KömaTex[NEW] sheets so that the foam structure does not collapse.

Hot-gas welding (with welding rod)

When hot-gas welding with a welding tip, the sheet material and the welding rod are plasticised at the weld by means of heated gas (max. 0.3 bar, low-pressure blowers, e.g. from Leister, Wegener, Zinser, Forsthoff) and preferably oil and water-free compressed air, and are then joined under pressure.

The necessary welding rods are part of our production range; they are available as coils or as pieces in different lengths and with different profiles. Both manual welding and machine welding are possible. The market offers a wide range of different welding equipment and welding tips.

In particular, high-speed nozzles have proven themselves, enabling high welding speeds and producing good and reliable weld seams by evenly heating up the sheet and welding rod.

Semi-automatic welding units with mechanical feed are particularly suitable for series production runs.

The most frequent welds are the fillet weld, the single V and the double-V butt weld (see DIN 16930 and 16932). Thin sheets are joined by single-V butt welds, thick sheets by double-V butt welds. The latter should be produced by welding on both sides alternately in order to avoid warping and buckling. The standard values for the temperature of heated gas (measured in the nozzle) as shown in the table on page 10 should be complied with in order to achieve weld seams with good welding factors.



Welding

KÖMACEL® KÖMATEX[NEW]® KÖMADUR®

Moreover, it is important to weld with undrawn filler rods and at constant pressure and speed. Always before using a new welding rod, the weld has to be scraped in order to remove thermally damaged material.

Proper and satisfactory welding requires experience and thorough practical training of the worker: hot-gas welding should, therefore, only be carried out by trained, skilled specialists.

Heated-tool welding (butt welding)

Another method of welding KömaCel, KömaTex[NEW] and KömaDur PVC-U sheets is the heated-tool welding procedure, in which tools of different shapes (circular, sword-shaped) are used. The perfectly smoothed-out and cleaned surfaces of the parts to be welded are heated up slightly by pressing them against the heated tool until they are plasticised. They are then pressed together. This welding process is simple and time-saving and produces joints that are almost free of stress and are also capable of withstanding high stress.

As long as the welding conditions, which depend on the material (temperature of the heated tools, contact pressure against the tool, contact pressure when joining and immediate joining after plasticising), are adhered to, the strength of the welding seams is almost equal to the strength of the basic material itself. Please refer to the table on page 10 for the standard values for these heating and contact-pressure conditions.

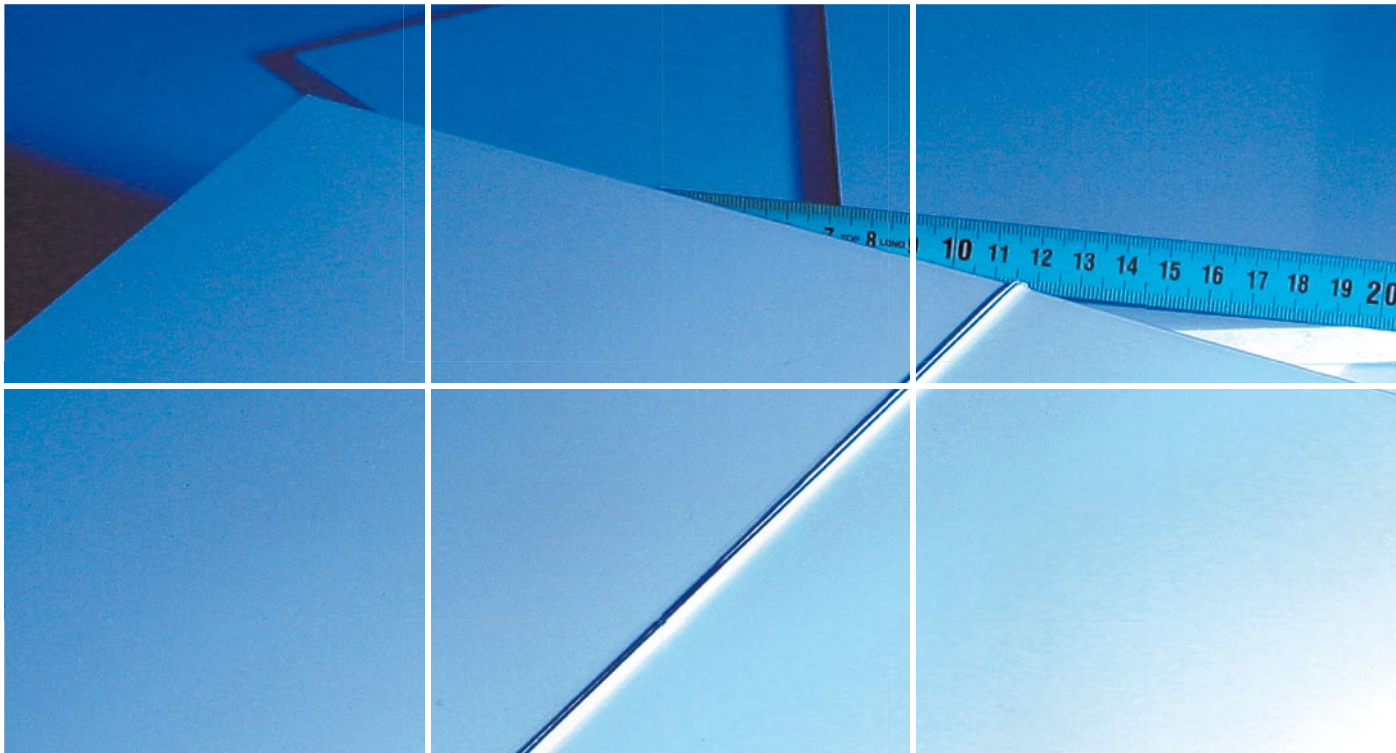

Hot-gas welding[1)]

Temperatures inside the welding nozzle (°C)

Material	Circular nozzle	High-speed nozzle
KömaCel/KömaTex[NEW]	240–270	270–290
KömaDur M, ES, H, D	300–330	220–350

Table: standard values for hot-gas and heated-tool welding

1) These standard values depend on the rate of hot-air flow (40–60 l/min), the welding speed, the type of welding rod, the temperature induction period, etc.

Circular nozzle 15–20 cm/min

Heated-tool welding[2)]

Material	Surface temperature of heated tool (°C)	Contact pressure (MPa) for heating	Contact pressure (MPa) for joining
KömaCel/KömaTex[NEW]	210–230	0,05	0,1-0,2
KömaDur M, ES, H, D	220–350	0,05 (contact press.)	0,3-0,5

Table: standard values for hot-gas and heated-tool welding

2) These standard values depend on the sheet thickness, heating time, etc.

Circular nozzle 30–70 cm/min

Welding

KÖMACEL® KÖMATEX[NEW]® KÖMADUR®

The following parameters must be precisely adjusted and checked at regular intervals.

During the course of heating, the plasticised material forms a bead. Heating should be stopped when this bead is 1–2 mm thick. The contact pressure of the heated tool against the sheet must be set so low in order to avoid too much of the plasticised material being squeezed out of the plasticised zone.

Immediately after removing the heated tool from the sheet, the plasticised parts must be firmly pressed together until the material has hardened again.

Folding and welding

The folding and welding process is a modification of the butt welding process. The sheet is resting on an even surface. The heated tool is placed on the sheet along the bending (folding) line as a cutting edge until it melts into the material.

The edge of the bar has an angle of 60° for rectangular folding. The bar should penetrate the sheet by up to 2/3 of its thickness, before it is raised again. Immediately on removing the bar, the sheet is folded and welded along the plasticised line.

In order to produce the necessary pressure at the heated bar, the angle between the edges to be welded must be 15° to 20° smaller than the folding angle wanted. If thick sheets have to be folded, the heating time can be reduced by milling a wedge-shaped groove into the welding line before applying the heated bar.

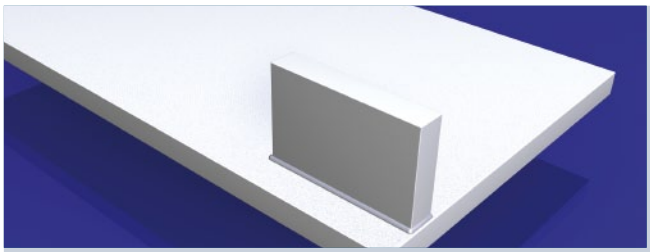

Bonding

KÖMACEL® KÖMATEX NEW® KÖMAPRINT® KÖMADUR®

KömaCel, KömaTex[NEW], KömaPrint and KömaDur sheets, just like all other PVC-U materials, can be bonded both among one another and to other materials. Different adhesive types may be used depending on the requirements and the specific use. For bonding KömaCel, KömaTex[NEW] , KömaPrint and KömaDur sheets to one another, adhesives containing solvents (e.g. C 004) as well as solvent-free polyurethane adhesives (e.g. C 012) are suitable. C 004 is a PVC-U adhesive with colourless curing, which, because of its joint-filling characteristics, is able to align small uneven areas on the bonding surfaces. It cures extremely fast and should only be used for bonding rather small surfaces (such as butt joints).

The stability characteristics of the cured bonding seams lie within the material stability range of the sheets themselves.

The PUR adhesives C 012 are solvent-free and resistant to moisture. They are suitable both for PVC-U sheets among one another and for bonding to other materials such as metals, stoneware, concrete, wood, many rigid plastics and rigid foam (polystyrene, PU, etc.). If using adhesives and adhesive systems that do not adhere with solvents, it will be necessary for the surface to be bonded to be cleaned first with 80/110 cleaner's naphtha or white spirit.

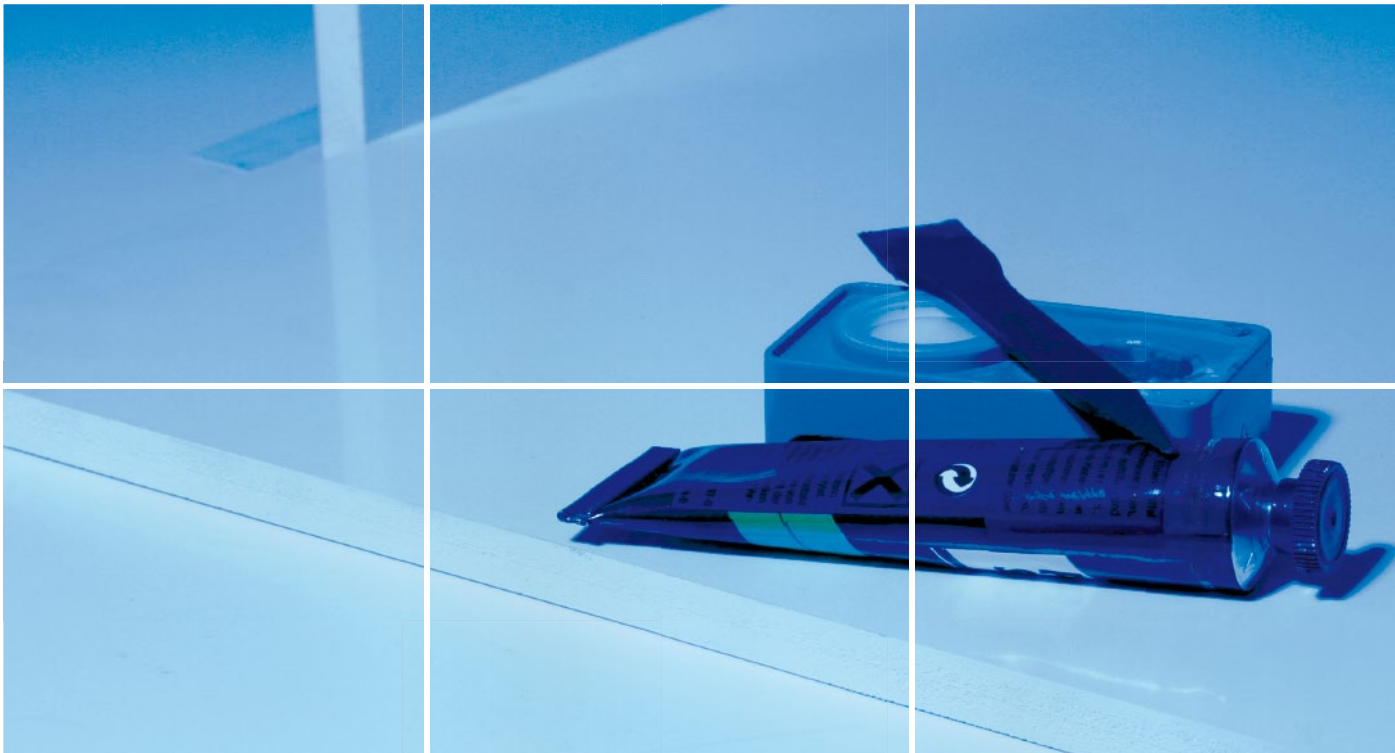



Printing and lacquering

KÖMACEL® KÖMATEX NEW® KÖMAPRINT® KÖMADUR®

Thanks to their smooth surface, KömaCel, KömaTex NEW, KömaPrint and KömaDur sheets can be easily printed, painted and lacquered. Basically, they can be lacquered with all lacquer systems suitable for PVC. The following systems have proven themselves particularly suitable:

1. One and two-component lacquer systems based on acrylic

2. Two-component polyurethane lacquer systems (“DD lacquers”)

3. Screen-printing inks for PVC (vehicle base acrylic resin/PVC copolymer)

The lacquer systems stated under 1. and 2. are good for spray application. The screen-printing inks cited under 3. (manufacturers: e.g. Diegel, Wiederhold, Marabu, Pröll and Sericol) are primarily for use in the screen-printing process. They can also be used for painting and lacquering. For this purpose, however, the inks must be set to the required viscosity. Please consult the ink manufacturers with regard to the ink types to be used. By the way, radiation-curing lacquers have recently started to be used. One disadvantage of these, however, is that the non-lacquered surface areas can suffer discoloration depending on the length of exposure to the radiation. The surface to be printed must, as with all other materials, be clean and grease-free. However, we do advise against lacquering large surface areas of sheets that will be exposed to direct sunlight with a dark lacquer, due to excessive increases in temperature.

If outdoor use and weathering properties have an important role to play, we strongly advise you to consult the ink manufacturers. The working guidelines and instructions given in the application data and information sheets published by the ink manufacturers must be adhered to and requested if not in your possession.

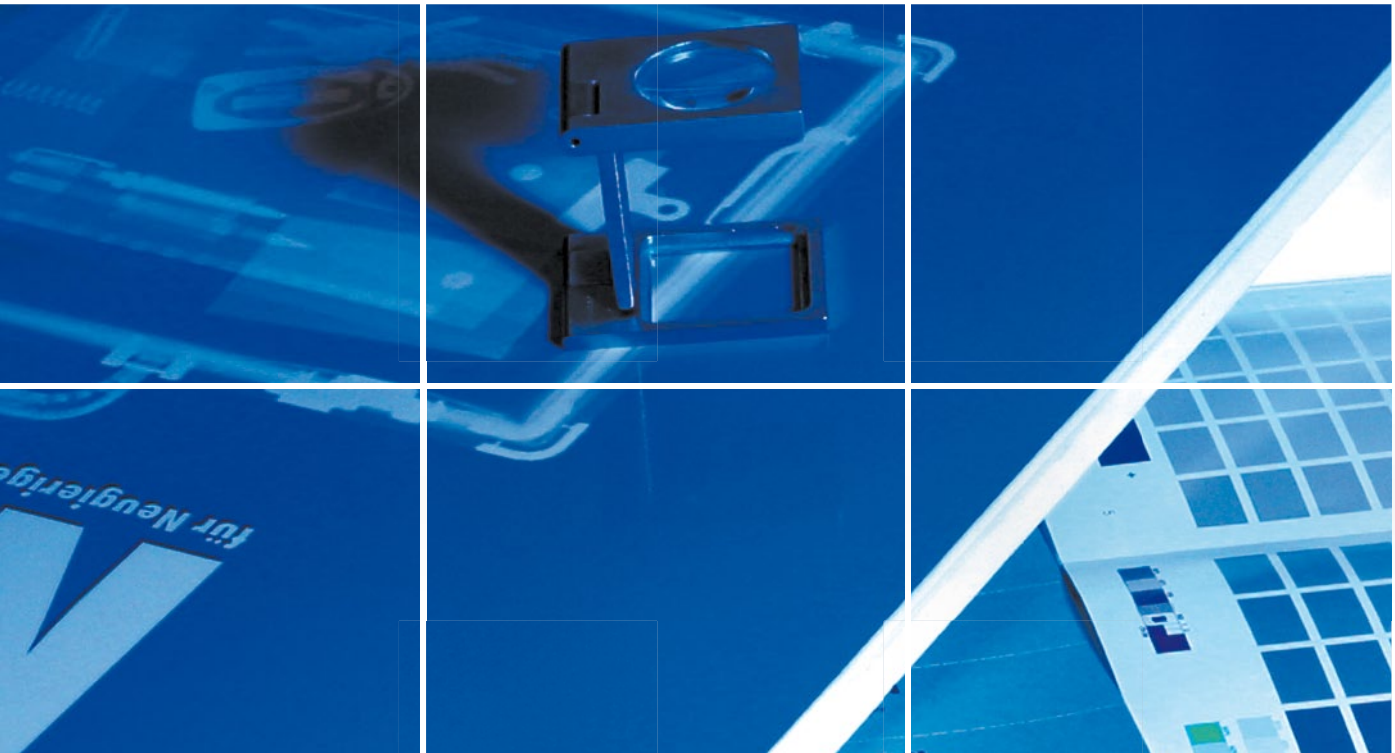

Digital direct printing

KÖMATEX NEW KÖMAPRINT

General information on direct printing

KömaTex NEW and KömaPrint sheets are being used more and more in digital direct printing. However, the sheets are just one of several factors that influence the print result. At least as important as the sheets themselves in respect of this printing process are factors such as protective films, the image structure, the press, printing ink, electrostatic charge, press operation and a variety of ambient conditions (humidity, temperatures, etc.). Whenever working with the digital direct printing process, always wear cotton gloves.

Influence of UV lamps

The age, number and positioning of the UV lamps used to cure the printing ink also play an important role: too low a level of UV intensity, for instance, leads to inadequate crosslinking and the ink not adhering to the sheets properly. If the UV intensity is too high, the substrate can yellow, while the IR radiation also emitted by the lamps can cause the substrate to overheat and ultimately warp (dish).

Image and colour values

Light and transparent colours adhere to the substrate better than dark and opaque colours thanks to the different crosslinking characteristics. However, too high an ambient humidity level can also be a reason for ink adhering poorly. The quality of ink adhesion can only be reliably tested at the earliest 24 to 48 hours after printing.

Influence of protective films

While protective films do prevent sheets from becoming soiled, they increase the level of electrostatic charge when removed and can consequently result in an irregular print image, that is, in “mottling”. For this reason, we recommend you use sheets without a protective film when direct printing with low-pigmented, single-colour motifs (e.g. for background panels).

Fixing instructions

As thermoplastics, KömaCel, KömaTex[NEW], KömaPrint and KömaDur sheets are subject to greater changes in length caused by the influence of temperature than materials such as wood or metal (coefficient of linear thermal expansion = 0.08 mm/m • °C). When making advertising materials such as façade and perimeter advertising boards, you must therefore always ensure the sheets have space to expand and are fixed in a way that both suits the application and allows them to expand and contract without becoming damaged.

Shipping and storage instructions

Store KömaCel, KömaTexNEW, KömaPrint and KömaDur sheets in air-conditioned, constantly dry rooms at a temperature of around 15–25 °C and on a level base. Do not exceed the maximum stacking height of a truck when storing.

Even while packed, the sheets must not be exposed to weather and sunlight, especially film-laminated sheets. Use a suitable fork-lift truck or lifting gear for loading and unloading.

When unloading, please check immediately that the sheet packaging is intact and document any damage in the shipping documents.

Film-laminated sheets should be used within 6 months.

Resistance of PVC

Resistance to	KömaCel, KömaTex[NEW], KömaPrint, KömaDur
aliphatic hydrocarbons: light naphtha, heptane, hexane, petroleum ether	resistant
vegetable fats, oils	resistant
mineral oils and greases	resistant
lyes: soap suds, soda lyes	resistant
acids: max 20% hydrochloric acid, max 5% sulphuric acid, max 5% acetic acid, max 5% citric acid	resistant
alcohols: ethyl alcohol, butanol, isopopanol, spirit	resistant
esters, ketones, aromatic hydocarbons, etc.: acetone, amyl acetate, aniline, ether, ethyl acetate, benzene, MEK	not resistant

Subject to change without prior notice

Working process/Cutting geometry

KÖMACEL® KÖMATEX[NEW]® KÖMAPRINT® KÖMADUR®

Working process		Cutting geometry	Unit	Value
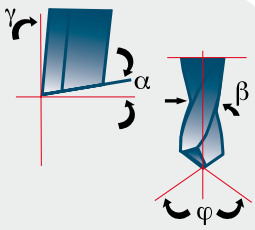	α	Relief angle	°	8–10
	β	Angle of twist	°	30
	γ	Rake angle	°	3–5
	φ	Point angle	°	80–110
	s	Feed	mm/rev	0.2–0.5
Drilling	v	Cutting speed	m/min	50–100
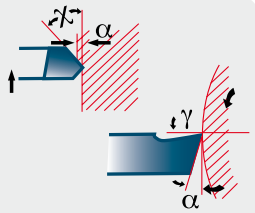	α	Relief angle	°	15
	γ	Rake angle	°	0–(–5)
	χ	Cutting-edge angle	°	45–60
	s	Feed	mm/rev	0.1–0.3
	v	Cutting speed	m/min	200–500
Turning/planing	a	Cutting depth	mm	Up to 6
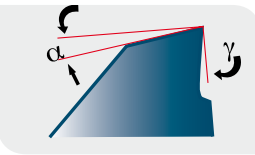	γ	Relief angle	°	5–10
	γ	Rake angle	°	0–15
	s	Feed	mm/U	0.3–0.5
Milling	v	Cutting speed	m/min	Up to 1000
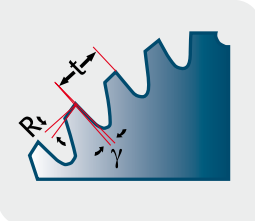	α	Relief angle	°	10–15 for carbide tips
	γ	Rake angle	°	0–5 for carbide tips 0–8 for band saws
	t	Pitch	mm	5-10 (8–10 for KömaCel)
	s	Feed	mm/rev	0.1–0.3
Sawing	v	Cutting speed	m/min	Up to 3000

Table: standard values for machining KömaCel, KömaTex[NEW], KömaPrint and KömaDur PVC-U sheets

Use of PVC-U sheets with exposure to sunlight

For many years now, PVC-U sheets, solid and foamed (expanded), have proven how suitable they are for outdoor applications such as signs, billboards, lettering boards and displays, under the most varied of weather and environmental conditions.

Weathering resistance

KömaCel, KömaTex[NEW], KömaPrint and KömaDur are weather and moisture-resistant and consequently highly suitable for outdoor use. This means these materials will undergo no changes to their physical properties over periods of many years. White sheet types are colour fast, while coloured sheets (red, green, blue, etc.) may suffer a change in colour (become brighter) due to the higher degree to which they absorb solar radiation.

Intensity of solar radiation

The limits of application of the PVC-U sheets are determined by the natural extent of exposure to UV radiation. For KömaDur, this is up to 120 kly/year and for KömaCel and KömaTex[NEW] up to 140 kly/year (cf. table).

Surface colouring

Sheets used outdoors (e.g. signs) must – apart from the signature/logo – always have light-coloured surfaces (white, light grey, etc.). Dark-coloured displays should not be used as they, like any dark-coloured object, absorb solar radiation to a great extent and can suffer damage as a result.

Climatic conditions in Europe:

City	Country	Global solar radiation (kly/year)
Hamburg	Germany	80
Brussels	Belgium	80
Paris	France	90
Munich	Germany	100
Vienna	Austria	100
Bordeaux	France	100
Venice	Italy	110
Marseilles	France	120
Rome	Italy	130
Barcelona	Spain	140
Lisbon	Portugal	140
Madrid	Spain	140
Athens	Greece	140
Ankara	Turkey	140
Palermo	Sicily/Italy	140
Las Palmas	Spain	150
Tunis	Tunisia	160
Casablanca	Morocco	160

Surface temperatures of sheets in various colours

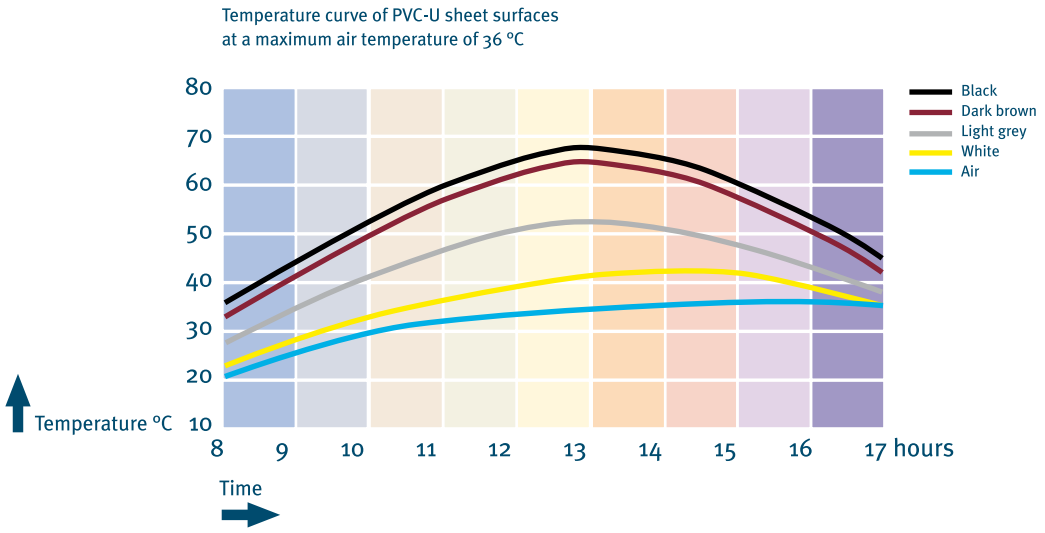

N. B.
The darker the colour and the higher the surface temperature, the greater is the resulting change in length.

Change in length as a factor of the difference in temperature, the length of the sheet and the coefficient of expansion (α= 0.08 mm/m · °C)

Example 1
l = 1.5 · 0.08 · 60 = 7.2 mm
That is, the change in length for a 1.5 m long white sheet and a difference in temperature of 60 °C is 7.2 mm.

Example 2
l = 3.0 · 0.08 · 60 = 14.4 mm
That is, the change in length for a 3 m long white sheet and a difference in temperature of 60 °C is 14.4 mm.

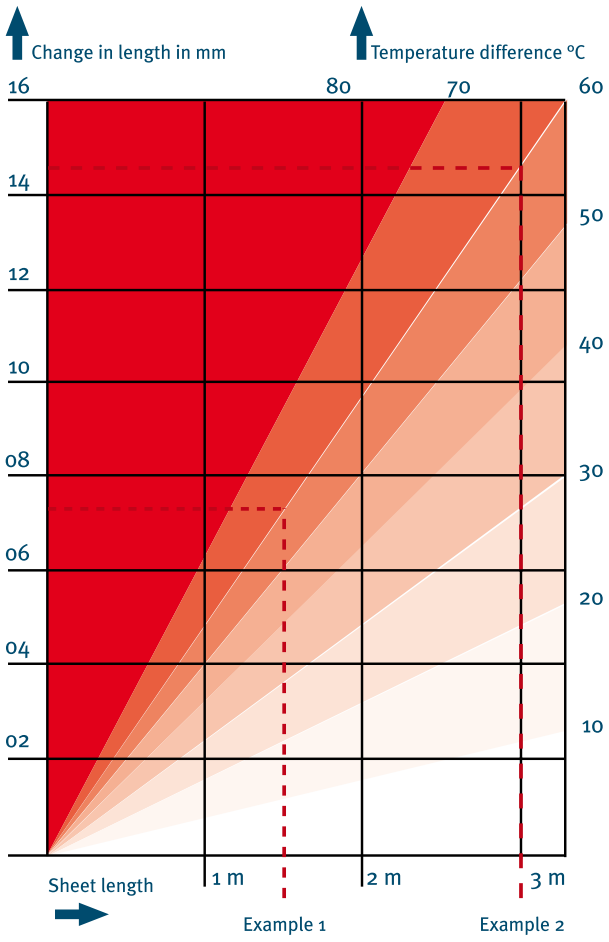

Use of PVC-U sheets for outdoor applications

Information on fixing sheets outdoors

When used as outdoor advertising signs, PVC-U sheets are subjected to considerable fluctuations in temperature. As in the case of all other plastics, the coefficient of linear thermal expansion for the change in length under the influence of heat is applicable and must be taken into consideration: coefficient of linear thermal expansion α = 0.08 mm/m · °C

PVC-U sheets from Kömmerling are moisture-resistant. As a consequence, any change in length can be predicted with precision, which is not the case with products from other manufacturers made of different materials, in which additional moisture-dependent movement occurs.

This change depends primarily on the maximum expected surface temperature and the length of sheet used. On the basis of the coefficient of thermal expansion (α) and the colour of the surface (white in our example), the difference in length can be computed as follows:

$\triangle l = l \cdot \alpha \cdot \triangle t$ (mm)
$\triangle l$ = change in length (mm)
l = sheet length (m)
$\triangle t$ = temperature difference (K or °C)
α = coefficient of thermal expansion (mm/m · °C)

The basic temperature to be taken for computing this figure is always the installation temperature. An increase in temperature results in expansion, a decrease in temperature results in contraction (shortening). Sheet contraction is based on the lowest outside temperature according to the climatic zone map (for Germany, this on average is –15 °C). The change in length can be found by referring to the following diagrams (from –15 °C outside temperature to +45 °C surface temperature*, with white being used in the example).
* Cf. diagram on page 17.

Fixing information

When dimensioning the mounting system, always factor temperature changes and wind loads – that is, push and pull – in the equation. If you mount thin sheets in a frame to give them greater rigidity, you must still allow for expansion. Furthermore, all fixing elements should be made of stainless steel in order to prevent the sheets from becoming soiled with rust stains.

Sheets on continuous wall surfaces
When fixing sheets to continuous wall surfaces, care must be taken to ensure there is sufficient ventilation, with the sheet being mounted with a minimum ventilation space between it and the wall of 2–4 cm. The gap left must allow air to circulate, e.g. with the aid of a lath construction.

Large-scale signs
When constructing large-scale signs, the inherent stability of the structure must be guaranteed. KömaCel 10 or even better KömaCel 19 mm sheets are highly suitable for this purpose. In special cases, such as perimeter advertising boards at sports grounds, where the structure has to withstand impacts and jarring, KömaCel 19 mm or extra impact-resistant sheeting such as 8 mm KömaDur ES should be used.

Free-standing signs
When constructing large-sized, free-standing advertising signs, the structure chosen must be capable of withstanding the heavy wind loads that will arise (additional reinforcement etc.).

KÖMMERLING®
Business Unit Sheets

Use of PVC-U sheets for outdoor applications

Screwed fixing

The natural change in length of PVC-U sheets used outdoors (e.g. advertising signs) requires a mounting system that permits the sheets to expand and contract when subjected to considerable changes in temperature.

One such mounting method is to fix the sheets with screws. In this case, holes or elongated slots are drilled, with care being taken to ensure there is sufficient space (play) between the screw shank and the side of the hole.

We recommend using half-round or round-head screws according to DIN 96. N.B.: do not use screws with a tapered section at the top of the shank due to the risk of the screws sinking into the holes and limiting movement caused by expansion/contraction of the sheet.

Care is also to be taken to ensure the screws are tightened such that the sheet has sufficient play between the holes. Large washers should be used to cover the holes or elongated slots. They also prevent the screw head from sinking in the hole. Elongated slots should be drilled when mounting sheets that exceed 1.5 m in length. When mounting PVC-U sheets inside buildings, where there are as a rule only slight temperature fluctuations, the hole diameter needs to be only 1–2 mm larger than the diameter of the screw shank.

Suspended boards

Typical slight stresses in sheets resulting from the extrusion process can be countered by stabilising at least the upper peripheral zones of the sheets by using, e.g. metal U-sections.



Screw fixing

Ventilated substructure

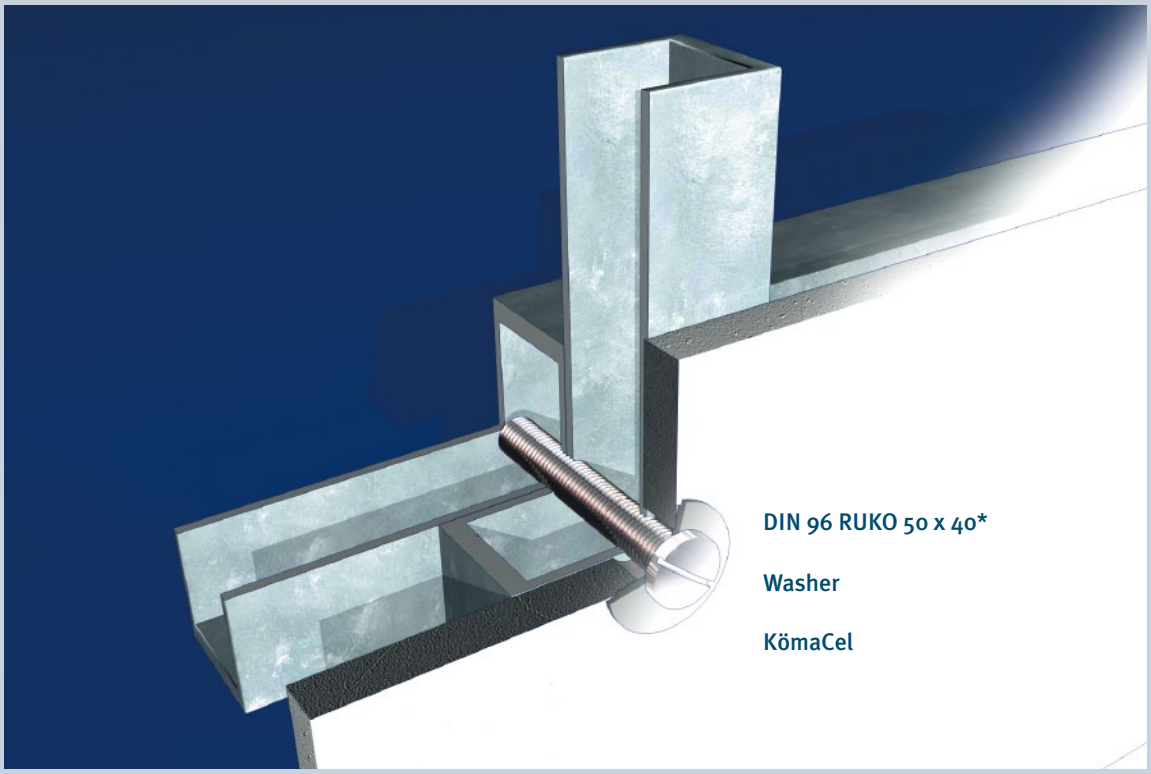

* = Round-head screw acc. to DIN 96

Pitch between the screwed fixing points
as a factor of the sheet thickness:

Sheet thickness	Pitch between the screwed fixing points
2 mm	Appr. 200 mm
3 mm	Appr. 300 mm
4 mm	Appr. 400 mm
5 mm	Appr. 400 mm
6 mm	Appr. 450 mm
10 mm	Appr. 500 mm
19 mm (24/30)	Appr. 500 mm

Use of PVC-U sheets for outdoor applications

Example I

An advertising sign made of KömaCel 654 (white), measuring 1500 x 1000 x 10 mm, is to be mounted outdoors to a ventilated substructure using screws. The screw shank diameter should be a minimum of 5 mm.

Determining the change in length and the hole diameter to be drilled

Min. surface temp. –15 °C
Max. surface temp. +45 °C (white)
Temperature difference 60 °C

Solution: round hole

Overall change in length (diagram on p. 3) = 7.2 mm
Hole anchoring point (◎)
= screw shank diameter + 2 mm = 7 mm

Due to the fact that the change in length is reduced by half in each direction from the anchoring point, the following hole diameter is required:

Holes allowing for movement (○) =
$\frac{7.2\text{ mm}}{2}$ + 5 mm = 8.6 mm

Hole diameter = 9 mm

Dimensions in mm

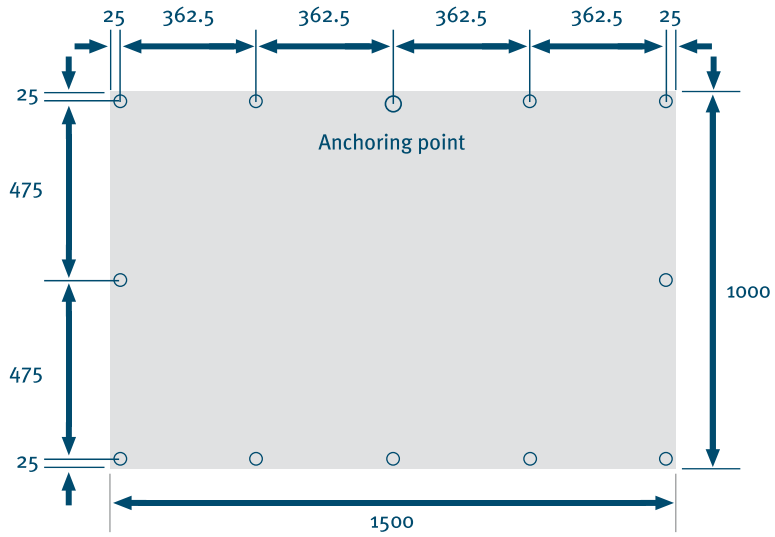

Furthermore, the hole centre distance from the edge of the sheet should be at least 2.5 times larger than the drilled hole.

Use of PVC-U sheets for outdoor applications

Example II

As in example I, but using KömaCel with the dimensions 3000 x 1000 x 10 mm and screws with a shank diameter of 5 mm.

The dimensioning of the anchoring points is to be computed on the basis of the main direction of movement (direction of extrusion).

Movement at right angles to the direction of extrusion is less pronounced and the required tolerance for a sheet 1 m wide can be assumed to be approx. 4,8 mm.

Solution: elongated hole

Overall change in length (diagram on p. 3)
= 14.4 mm

Hole diameter of anchoring point (◎)
= screw shank Ø + 2 mm = 7 mm

Elongated holes allowing for movement

$$= \frac{14.4 \text{ mm}}{2} + 5 \text{ mm} = 12.2 \text{ mm}$$

Dimensions in mm

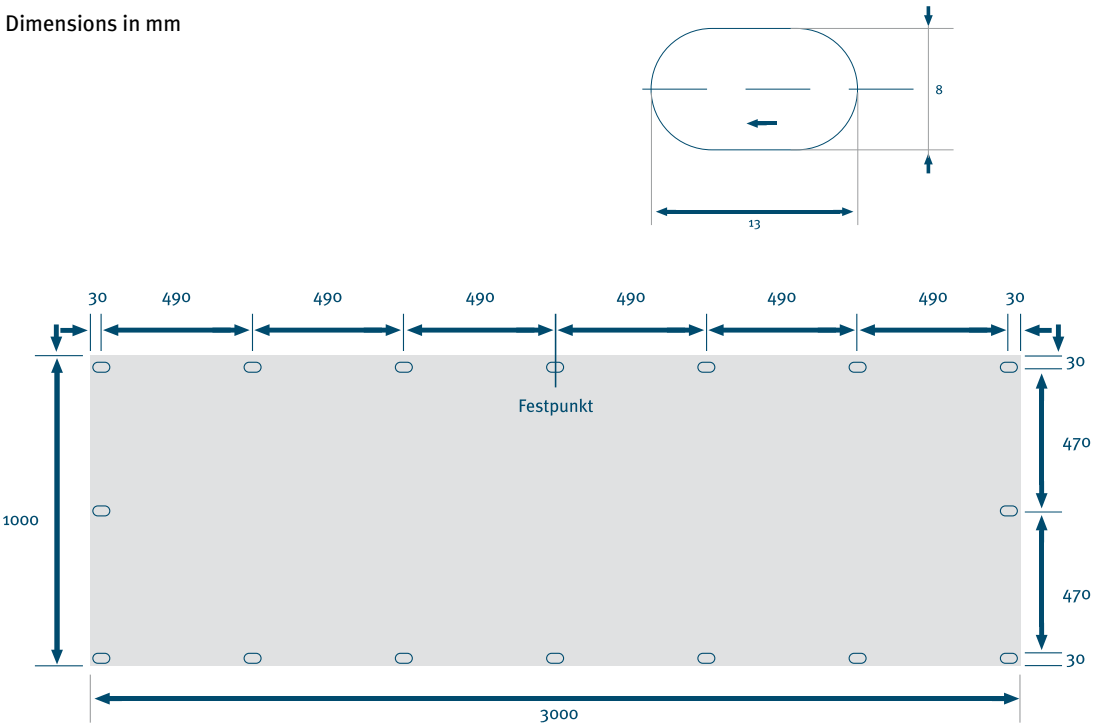

Frame fixing

Another possibility for mounting sheets outdoors is frame mounting using metal U-section rails, which are particularly suitable for large sign façades. Movement of the sheets due to temperature changes (expansion and contraction) is to be taken into account here as well. U-sections with unequal sides have proven to be the most suitable for this purpose. Care must be taken to ensure the substructure is sufficiently ventilated (lath construction). The size of the expansion joints required to permit movement must be calculated as described in the above example and the diagram on page 17.

Example III

Large sign façade consisting of several KömaCel 654 sheets (white), measuring 3000 x 1000 x 10 mm (19 mm), mounted in a U-section frame.

The following expansion joints have to be defined:
1. H-section between the sheets
2. At the beginning of the frame
3. At the top side of the frame

The following temperature conditions are to be assumed, as in example I:

Min. surface temp.	–15 °C
Max. surface temp.	+45 °C (white)
Temperature difference	60 °C
Installation temperature	+20 °C.

Solution (cf. diagram on page 17):
Change in length (l) for a sheet with a total length of 3 m l = 14.4 mm

Change in width (b) for a sheet with a total width of 1 m l = 4.8 mm

N.B.:

Assuming an installation temperature of 20 °C, the total movement, i.e. expansion/contraction, of the individual sheet elements is as follows:

Expansion (Δt = 25 °C)
l = + 6.0 mm b = + 2.0 mm

Contraction (Δt = 35 °C)
l = – 8.4 mm b = – 2.8 mm

Change in length over the entire temperature range
l_{total} = 14.4 mm b_{total} = 4.8 mm

The temperature prevailing during installation is, therefore, to be taken into account and the dimensions and positioning of the expansion joints to be determined accordingly (cf. sketch below).

Example III–Example for fixing large sign façades made of KömaCel

Circumferential U-section frame

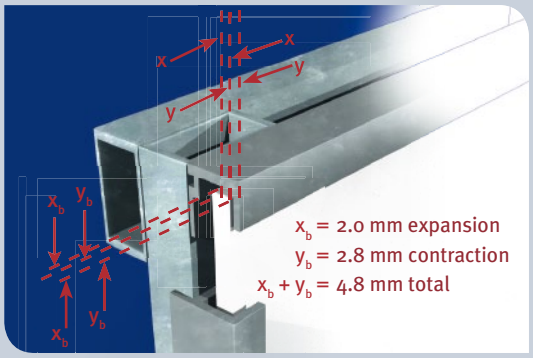

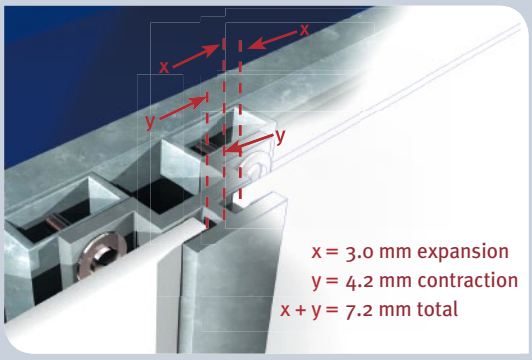

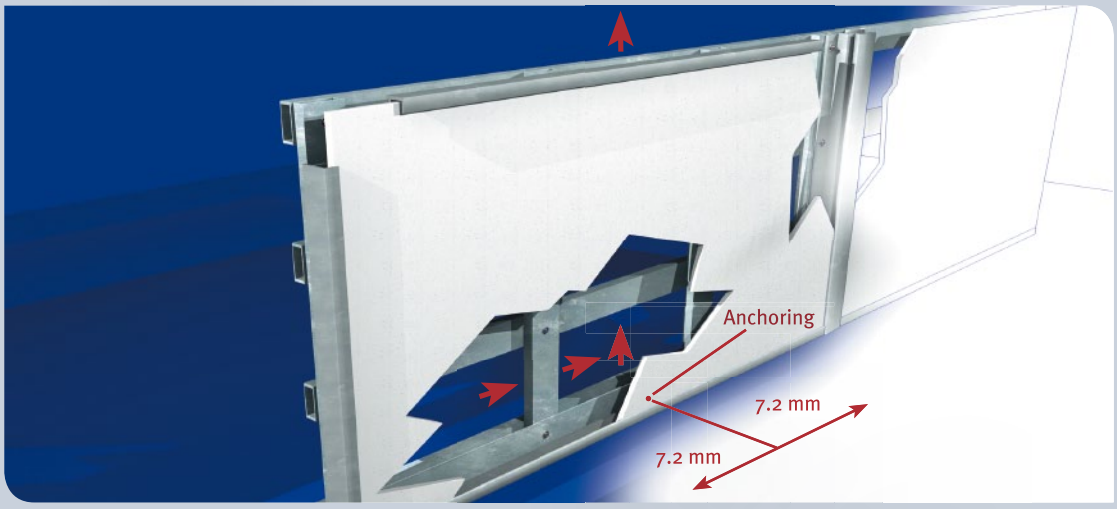

KÖMMERLING®
Business Unit Sheets

For the sake of the environment

"Recycling and reuse"

There are no toxic or harmful substances in KömaCel, KömaTex[NEW], KömaPrint and KömaDur that can be given off over the long term. KömaCel, KömaTex[NEW], KömaPrint and KömaDur are free from formaldehyde, asbestos, lindane, PCB, PCP and CFCs. What's more, they are cadmium and lead-free and are also made without any monomers, biocides or plasticisers.

This is why KömaCel, KömaTex[NEW], KömaPrint and KömaDur pose absolutely no hazard to people or the environment, neither during their manufacture, while in use, nor during the recycling process.
Old sheets no longer in use or left-over sections of sheets can be recycled without any problem: they are ground up in shredders and cutting machines before being returned to the production process to make new sheets. This closed material cycle is not only economical, but ecological, too.

Certified to DIN ISO 9001

"Uncompromising quality from start to finish"

Systematic research and development work and decades of experience with plastics are the basis for the generally recognised high quality of our products.

We carry out tests at all stages—starting with the raw materials on delivery through to final inspection of the finished products.

Regular examinations and analyses conducted by independent testing institutes confirm the high degree of care we take during the production process. Our quality assurance system is certified to DIN ISO 9001.





With the compliments of:

profine GmbH - KÖMMERLING KUNSTSTOFFE/Business Unit Sheets - PO Box 21 65 - 66929 Pirmasens - Germany
Phone +49 (0)6331 56-0 - Fax +49 (0)6331 56-2006 - info@komasheets.com - www.komasheets.com

Order No. 2 02 170060 – 0113.SRD