SINCE 1945
KEYSTONE

PARALLELWIRE
ELECTRONIC SIGN BALLASTS

KTSB-E-0432-14-UV

DESCRIPTION

2-4 Lamps | T8HO or T12HO | 4'-32' Combined Lamp Length | Parallel Wiring

STARTING METHOD	INPUT VOLTAGE	LAMP CONNECTION	INPUT FREQUENCY
Instant Start	120-277VAC ±10%	Parallel	60/50 Hz

PRODUCT FEATURES

- Sound Rated: A
- Minimum Starting Temperature:-20ºF, -30ºC
- Maximum Case Temperature: 194ºF, 90ºC
- Meets FCC Part 18 (Class A) Non-Consumer Limits
- UL, cUL 935 Listed, Class P, Type 2 Outdoor, Type HL

ELECTRICAL SPECIFICATIONS FOR COMMON CONFIGURATIONS

Lamp Type	No. of Lamps	Input Volts	Input Watts	Input Current	Power Factor	Crest Factor
F96T12/HO*	4, 3, 2, 1	120V	267W	2.40A	>0.90	<1.70
		277V	267W	1.00A	>0.90	<1.70
F72T8/HO	4, 3, 2, 1	120V	244W	2.20A	>0.90	<1.70
		277V	242W	0.90A	>0.90	<1.70

*Primary Lamp Type

Consult factory for additional sign configurations.

LAMP FOOTAGE

Lamp Type	Minimum	Maximum
T12HO	4'	32'
T8HO	4'	24'

MECHANICAL SPECIFICATIONS

CASE DIMENSIONS

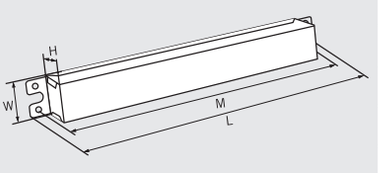

LENGTH	11.65"
WIDTH	3.15"
HEIGHT	1.85"
MOUNTING	11.00"
CASE STYLE	L15

STANDARD LEAD LENGTHS*

WHITE	24"
BLACK	24"
RED	120"
BLUE	120"

*Consult Keystone for special lead length requirements.

Lead wires are 18 AWG 105ºC/600V, solid copper.

CASE MATERIAL: Metal

Keystone Technologies • 208 Progress Drive, Montgomeryville, PA 18936 • Phone (800) 464-2680 • Fax (888) 966-0556 • **www.keystoneballast.com**

Specifications subject to change. Last revised on 6.5.18

SINCE 1945
KEYSTONE

PARALLELWIRE
ELECTRONIC SIGN BALLASTS

KTSB-E-0432-14-UV

FOR INSTALLATION PURPOSES

Electronic sign ballast for 4, 3, 2 and 1 T12HO lamps up to 8’ long or any combination thereof from 4’-32’.

Electronic sign ballast for 4, 3, 2 and 1 T8HO lamps up to 6’ long or any combination thereof from 4’-24’.

WIRING DIAGRAM

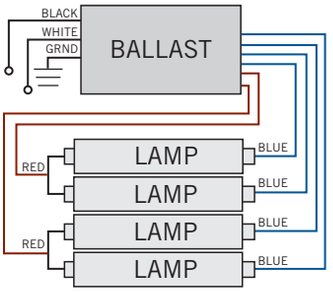

4 LAMP OPERATION

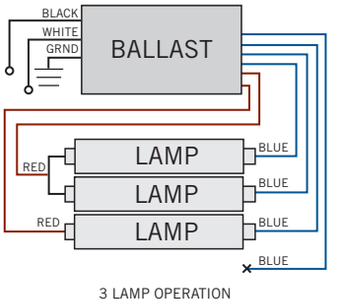

3 LAMP OPERATION
INDIVIDUALLY CAP BLUE LEADS;
INSULATE UNUSED WIRE

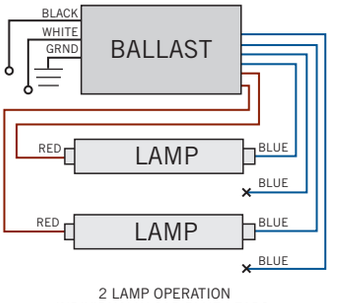

2 LAMP OPERATION
INDIVIDUALLY CAP BLUE LEADS;
INSULATE UNUSED WIRE

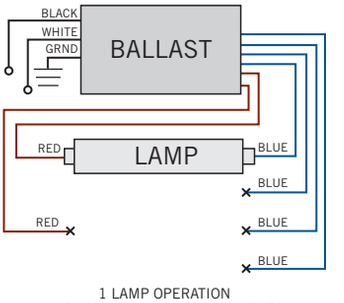

1 LAMP OPERATION
INDIVIDUALLY CAP RED AND BLUE LEADS;
INSULATE UNUSED WIRE

HOT SPOT LOCATION

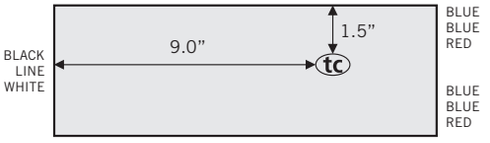

Actual tc point is noted on each ballast label.

ORDERING INFORMATION

ORDER CODE	PACKAGING STYLE	PACK QTY.	ITEM STATUS
KTSB-E-0432-14-UV /A-IP	Individually Packaged	1	Quick Ship

CATALOG NUMBER BREAKDOWN

KTSB-E-0432-14-UV /A-IP

- KTSB — Keystone Technologies Sign Ballast
- E — Electronic
- 04 — Min. Total Lamp Length*
- 32 — Max. Total Lamp Length*
- 1 — Min. Lamps
- 4 — Max. Lamps
- UV — 120-277V Input
- /A — Manufacturing Revision
- IP — Packaging Style

*Minimum and maximum total lamp length based on T12HO lamps.

Keystone Technologies • 208 Progress Drive, Montgomeryville, PA 18936 • Phone (800) 464-2680 • Fax (888) 966-0556 • **www.keystoneballast.com**

Specifications subject to change. Last revised on 6.5.18