KT-LED70HID-ADJ-EX39-8XX-D

MULTI-ANGLE ADJUSTABLE LAMP

DESCRIPTION

Multi-Angle Adjustable Lamp | Smart Port Sensor Compatible

APPLICATION

Used for low bay/high bay, post top, and shoebox applications

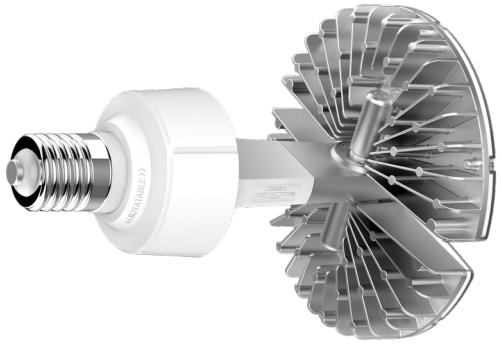

PRODUCT FEATURES

- Replacement for 250W metal halide lamp
- 50,000+ hour lifetime
- Environmentally friendly: No mercury used
- Instant startup
- UL Listed
- Operating Temperature: –30ºC/–22ºF to 45ºC/113ºF
- Integral driver, eliminates the need for external driver or ballas; includes 4kV surge protection
- Suitable for use in enclosed fixtures
- Do not use with standard dimmers. Not compatible with phase dimmers. Dimming functions with sensors only

PERFORMANCE SPECIFICATIONS

Catalog Number	Wattage	CCT	Lumen Output*	Efficacy	Input Voltage	Base	DLC	CRI	Metal Halide Equivalent
KT-LED70HID-ADJ-EX39-830-D	70W	3000K	9,660	138 lm/W	120–277V	EX39	Yes	≥80	250W MH
KT-LED70HID-ADJ-EX39-840-D	70W	4000K	10,150	145 lm/W	120–277V	EX39	Yes	≥80	250W MH
KT-LED70HID-ADJ-EX39-850-D	70W	5000K	10,500	150 lm/W	120–277V	EX39	Yes	≥80	250W MH

* Based off of total lamp lumens

PHYSICAL SPECIFICATIONS

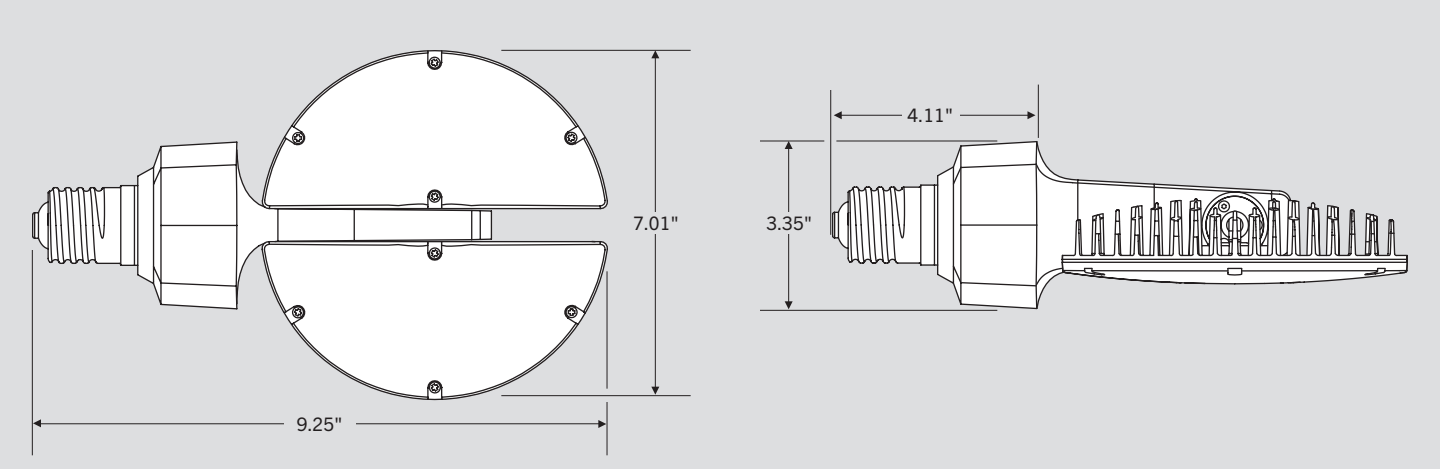

KT-LED70HID-ADJ-EX39-8XX-D

MULTI-ANGLE ADJUSTABLE LAMP

WIRING INSTRUCTIONS

STEP 1
Turn off the power before installation.

STEP 2
Remove the old ballast, capacitor, and igniter, if applicable.

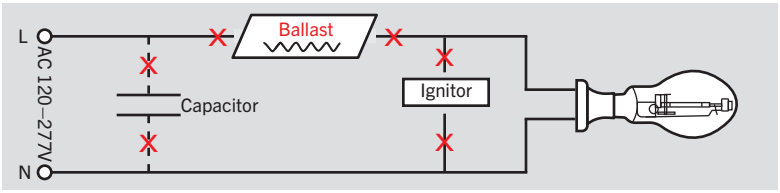

STEP 3
Make sure AC wires connect to EX39 socket directly.

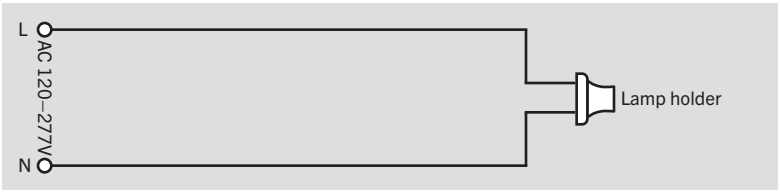

STEP 4
Screw the LED lamp into the corresponding socket.

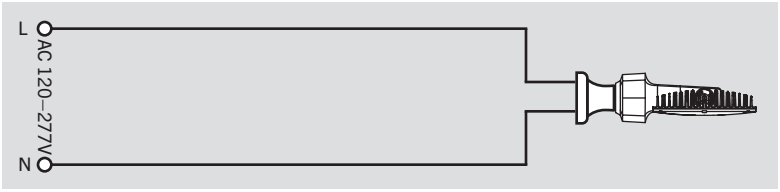

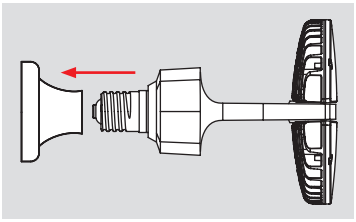

STEP 5
Turn on power to confirm lamp is operating as intended.

EX39-based lamps will work in *both* **E39** and **EX39** sockets.

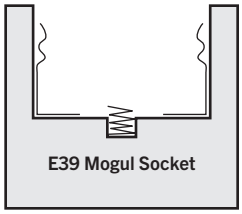

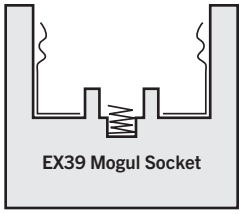

SMART PORT LED

Operate as a standard lamp or insert interchangable modules into the Smart Port to enhance lamp functionality.

Note: When using Smart Port, refer to installation instructions included with sensors.

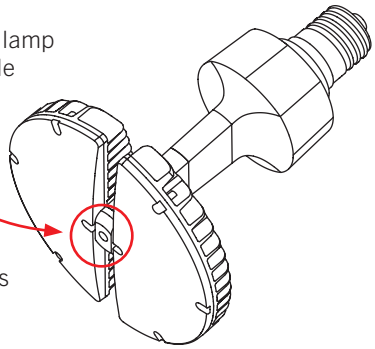

PHOTOCELL

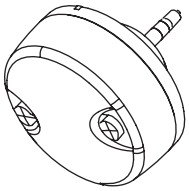

MICROWAVE

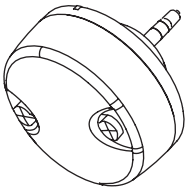

PIR

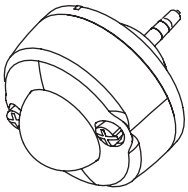

KT-LED70HID-ADJ-EX39-8XX-D

MULTI-ANGLE ADJUSTABLE LAMP

APPLICATIONS

LOW BAY/HIGH BAY





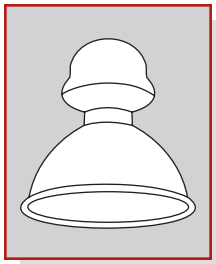

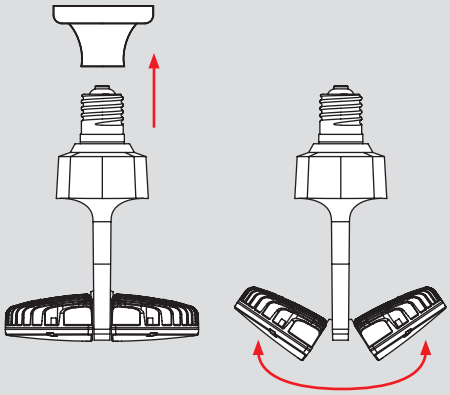

POST TOP





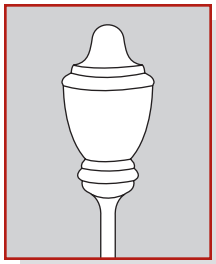

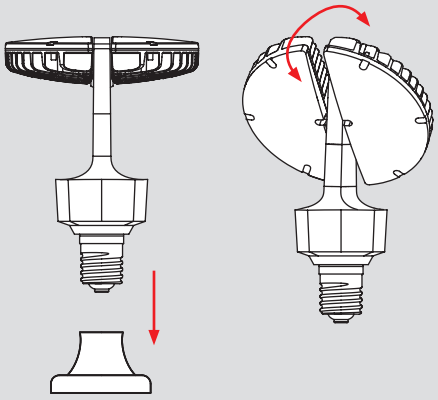

SHOEBOX

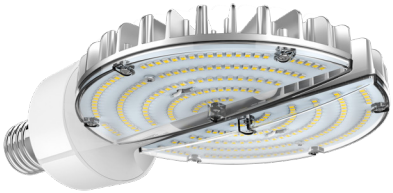

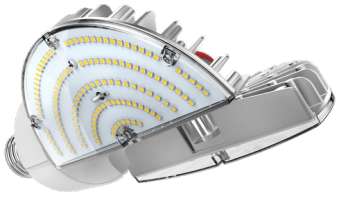

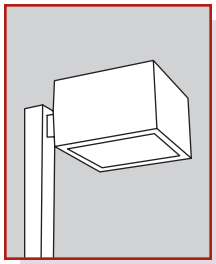

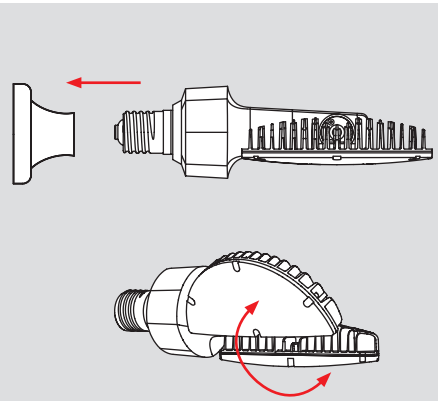

KT-LED70HID-ADJ-EX39-8XX-D

MULTI-ANGLE ADJUSTABLE LAMP

ADAPTER



Adapter included with Multi-Angle Adjustable Lamp.

For use with Smart Port LED Sensors when lamp is installed in a horizontal application.

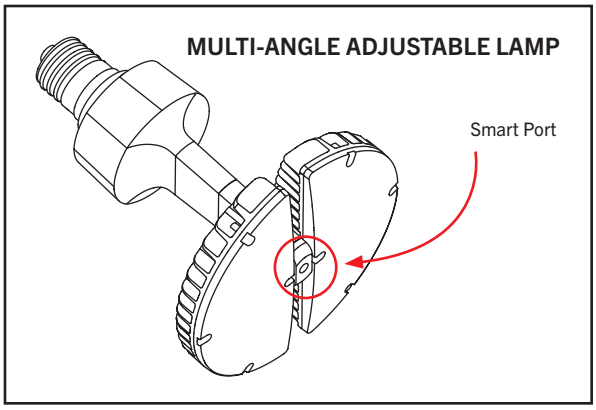

Installation Instructions

STEP 1
Insert adapter into Smart Port.

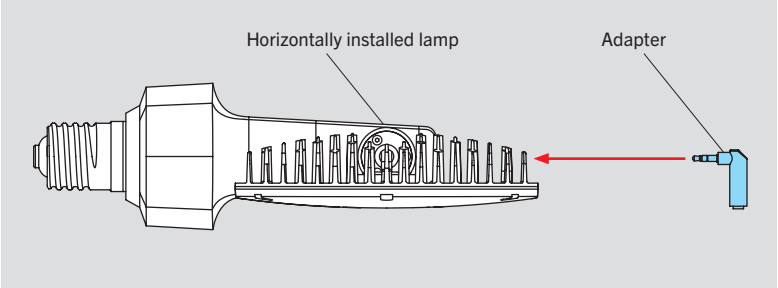

STEP 2
Insert Smart Port module into adapter.

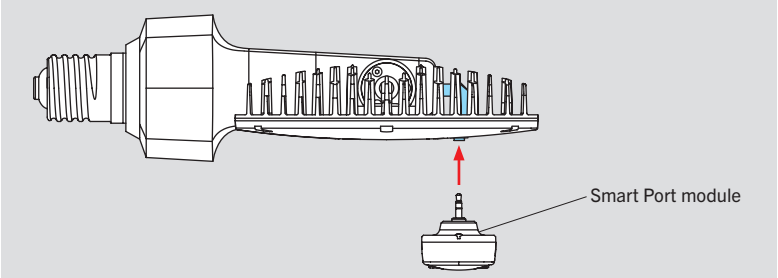

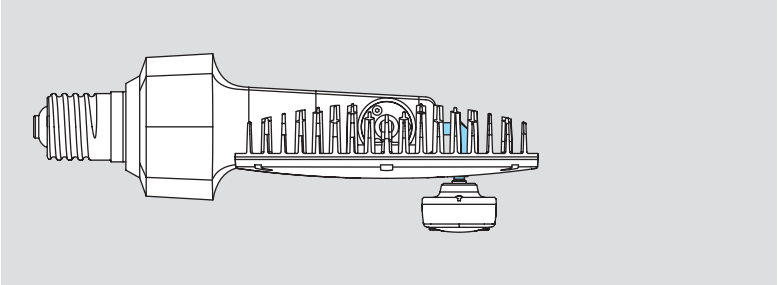

KT-LED70HID-ADJ-EX39-8XX-D

MULTI-ANGLE ADJUSTABLE LAMP

SMART PORT LED

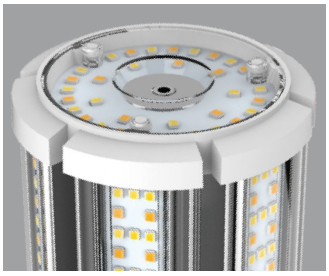

On the top of the lamp is a low-voltage AUX port for lamp level sensor controls.

SMART PORT LED AUX SENSORS

Microwave	Passive Infrared (PIR)	Photocell Daylight	0-10V Cable *
			

* For use with continuous dimming applications.

ORDERING INFORMATION

Catalog Number	Pack Quantity	Easy Code	UPC
KT-LED70HID-ADJ-EX39-830-D	8	UVL-68	843654127170
KT-LED70HID-ADJ-EX39-840-D	8	PVE-18	843654127187
KT-LED70HID-ADJ-EX39-850-D	8	XYD-18	843654127194

CATALOG NUMBER BREAKDOWN

KT-LED70HID-ADJ-EX39-8XX-D

1 2 3 4 5 6 7 8 9

1 **Keystone Technologies**
2 **LED Lamp**
3 **Wattage**
4 **Lamp Type**
5 **Adjustable Angle**
6 **Base Type**
7 **800 Series**
8 **Color Temperature**
9 **Direct Drive**