KT-FLED15-R1A-UNV-8CSB-VDIM

COMPACT 15W GENERAL-PURPOSE LED FLOODLIGHT

DESCRIPTION

Compact 15W General-Purpose LED Floodlight | 120–277V Input | 3000–5000K | Bronze Housing | Multiple Mounting Options

APPLICATION

Building or ground mount application for outdoor illumination (landscapes, display signage, loading docks, building façades, pathways, parking areas, and other general site lighting requirements)



5 YEAR WARRANTY

PRODUCT FEATURES

- Keystone Color Select technology (3000/4000/5000K)
- Uniform, wide flood design (NEMA 7H x 7V distribution pattern)
- Heavy-duty, die cast aluminum housing featuring built-in glare visor and tempered glass lens
- Powered by Keystone 0–10V dimming LED driver
- Built-in dusk-to-dawn photocell behind translucent 3/4" threaded plug with anti-yellowing agent
- Heavy-duty 1/2" knuckle mount with 90º adjustment and yoke mount options included
- Ambient operating temperature: –30ºC/–22ºF to 45ºC/113ºF
- UL listed for wet locations, IP65
- 0–10V dimming, 10% min
- Power Factor: >0.95
- THD: <20%
- LED chip lifetime: L70 >100,000 hrs @ 25ºC/77ºF ambient fixture temp
- Meets FCC Part 15, Part B, Class A standards for conducted and radiated emissions
- 18" input cable, pre-stripped
- Fixture impact rating IK06

PERFORMANCE SPECIFICATIONS

Catalog Number	Wattage	Selectable CCT*	Lumens	Efficacy	Input Voltage	Housing Color	Optics Type	DLC	CRI	Metal Halide Equivalent
KT-FLED15-R1A-UNV-8CSB-VDIM	15W	3000K	1920 lm	128 lm/W	120–277V	Bronze	7H x 7V	Yes	>80	70W MH
		4000K	2175 lm	145 lm/W						
		5000K	2100 lm	140 lm/W						

** Color Uniformity: CCT (Correlated Color Temperature) range as per guidelines outlined in ANSI C78.377-2017*

KT-FLED15-R1A-UNV-8CSB-VDIM

COMPACT 15W GENERAL-PURPOSE LED FLOODLIGHT

PHOTOMETRIC SPECIFICATIONS

ISOCANDELA PLOT

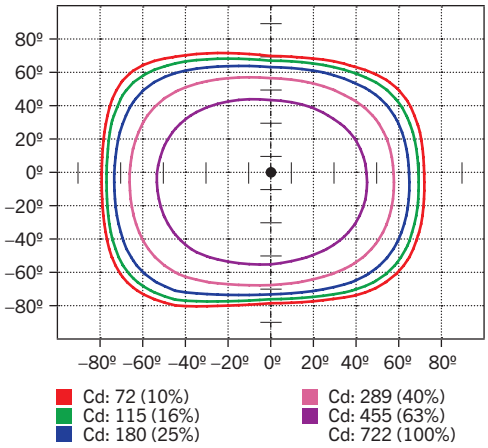

LUMINOUS INTENSITY DISTRIBUTION

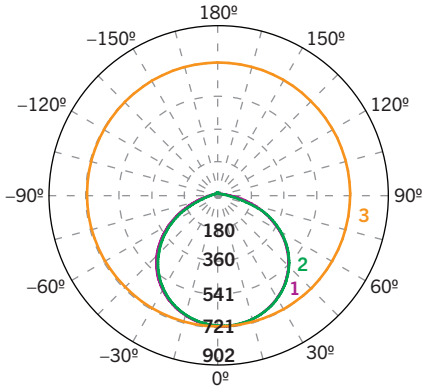

Average diffuse angle (50%): **114.0º**

1 **Violet** C0 – C180

2 **Green** C90 – C270

3 **Orange** G6

Unit: cd

FLUX DISTRIBUTION

Zone	Lumens	% Luminaire
Forward Light	1,093 lm	53.7%
0º–30º	287 lm	14.1%
30º–60º	585 lm	28.7%
60º–80º	214 lm	10.5%
80º–90º	7 lm	0.4%
Back Light	925 lm	45.5%
0º–30º	277 lm	13.6%
30º–60º	513 lm	25.2%
60º–80º	134 lm	6.6%
80º–90º	2 lm	0.1%
Up Light	16 lm	0.8%
90º–100º	1 lm	0.0%
100º–180º	15 lm	0.7%

BUG* Rating	
Asymmetrical Luminare Types	
Type I, II, III, IV	B1 U2 G1
Quadrilateral Symmetrical Luminare Types	
Type V, Area Light	B1 U2 G0

* ***B****acklight,* ***U****plight,* ***G****lare*

LIGHT DISTRIBUTION PATTERNS (Isometric view from above)

Building exterior mounted at
10', 30º below horizontal

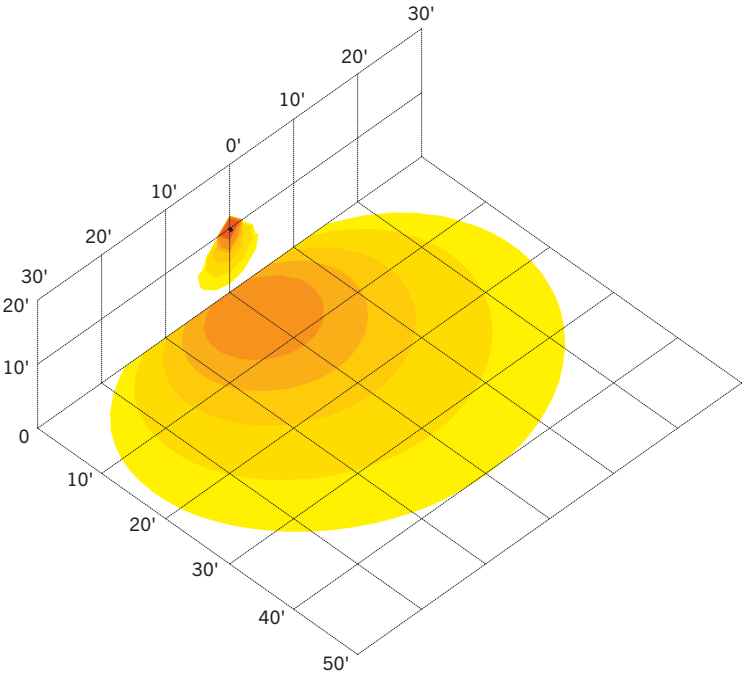

Ground mounted at 6" above ground,
10º above horizontal, shining towards building exterior wall at 8' away

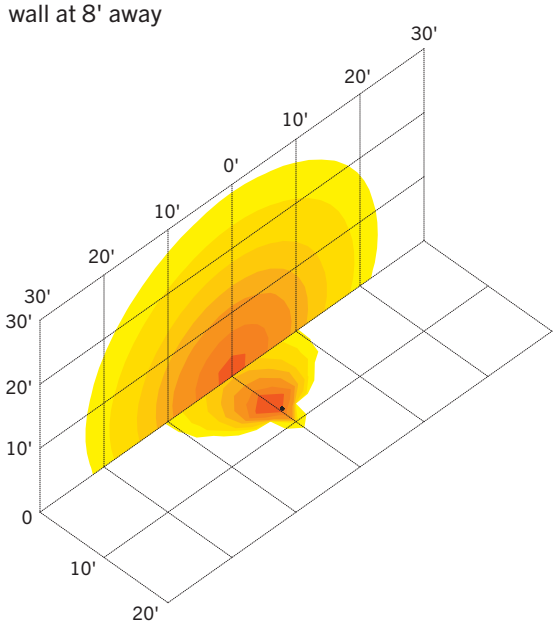

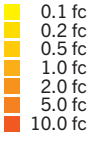

KT-FLED15-R1A-UNV-8CSB-VDIM

COMPACT 15W GENERAL-PURPOSE LED FLOODLIGHT

PHYSICAL SPECIFICATIONS

KNUCKLE MOUNT

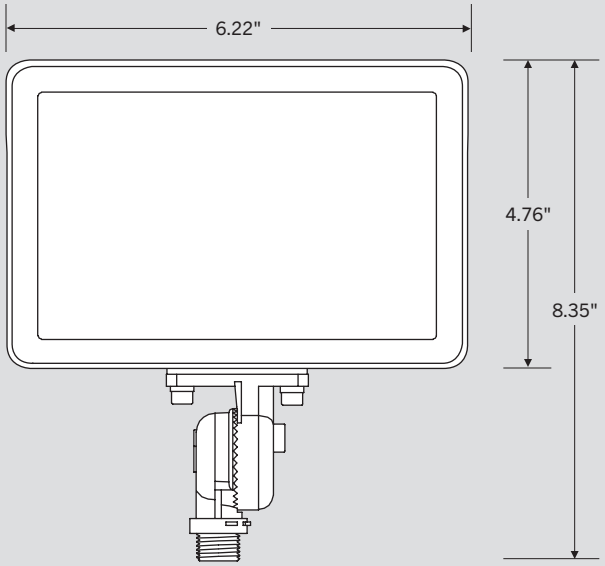

YOKE MOUNT

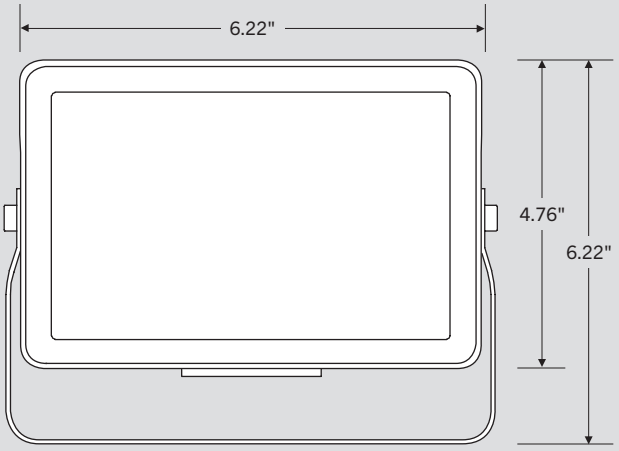

	EPA
Mounted Vertical	0.25 sq/ft
Mounted Horizontal	0.12 sq/ft
Mounted 45º	0.26 sq/ft

KT-FLED15-R1A-UNV-8CSB-VDIM

COMPACT 15W GENERAL-PURPOSE LED FLOODLIGHT

GENERAL SETUP INSTRUCTIONS

GENERAL WIRING DIAGRAM

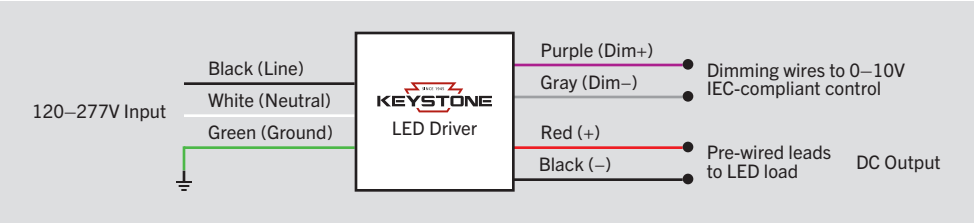

Caution: Before installing, make certain that AC power to the fixture is off.

Caution: The electrical rating of this product is 120–277V. Installer must confirm that there is 120–277V at the fixture before installation.

PHOTOCELL ENABLE / DISABLE

This fixture is equipped with a dusk-to-dawn photocell behind the translucent knock-out (KO) cover. Adjust the dip switch to enable (ON) or disable (OFF) the photocell function (see illustrations to the right). Fixture comes pre-set with photocell enabled unless otherwise noted.

COLOR SELECT (CCT) ADJUSTMENT

This fixture is equipped with Color Select technology. There is an adjustable dip switch behind the translucent knock-out (KO) cover to change CCT between 5000K, 4000K, and 3000K (see illustrations to the right). Fixture comes preset at 5000K unless otherwise noted.

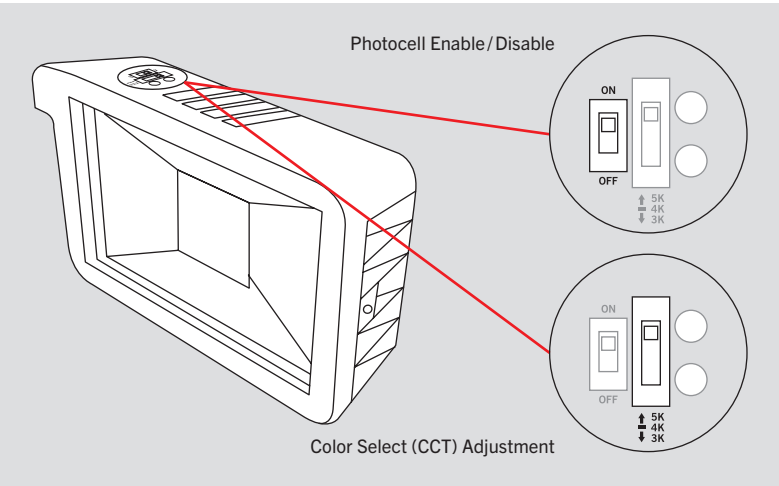

ACCESSORIES (SOLD SEPARATELY)

CORD SETS

Factory-Installable OR Field-Installable (field-installable options must be purchased separately)

✓	SUFFIX*	CATALOG NUMBER	DESCRIPTION	UPC	EASY CODE
	/515P6	KT-CS-515P-6-18/3	Cord set; 125V NEMA 5-15P; straight blade plug; 6' SJTOW cable; 18/3 wire	843654140124	UKH-26

** For factory installation of accessory, add suffix to fixture part number (see ordering examples and instructions on last page of spec sheet).*
***Note:** For cord sets not listed here, please contact your Keystone sales rep.*

KT-FLED15-R1A-UNV-8CSB-VDIM
COMPACT 15W GENERAL-PURPOSE LED FLOODLIGHT

ACCESSORIES (continued)

MOUNTS AND BRACKETS

Field-Installable (field-installable options must be purchased separately)

✓	SUFFIX*	CATALOG NUMBER	DESCRIPTION	UPC	EASY CODE
	N/A	KT-FLED-SM-1-KIT	Surface Mount / Wall Mount Kit for Series 1 Flood Lights. Fits 15W thru 60W fixtures. Includes Mounting Hardware. Standard Bronze Housing	843654129167	HZJ-35
	N/A	KT-FLED-RC-4	Round Cover Plate for mounting Floodlights on 4" Round boxes. Includes Mounting Hardware. Standard Bronze Color	843654129181	IOI-49
	N/A	KT-FLED-WG-1-KIT	Wire Guard for 15W Rectangular Series 1 LED Floodlight	843654138824	GEJ-72
	N/A	KT-FLED-SF-1-KIT	Slip Fitter Mount Adaptor for 15W, 35W, and 60W Rectangular Series 1 LED Floodlight. Bronze	843654153308	TZP-68



Surface Mount / Wall Mount Kit
KT-FLED-SM-1-KIT

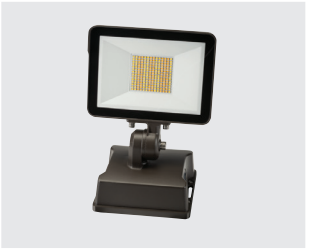



Round Cover Plate
KT-FLED-RC-4



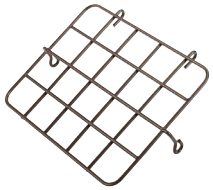

Wire Guard
KT-FLED-WG-1-KIT





Slip Fitter Mount Adaptor
KT-FLED-SF-1-KIT



KT-FLED15-R1A-UNV-8CSB-VDIM

COMPACT 15W GENERAL-PURPOSE LED FLOODLIGHT

ORDERING INFORMATION

CATALOG NUMBER	PACK QTY.	EASY CODE	UPC	DLC PRODUCT ID
KT-FLED15-R1A-UNV-8CSB-VDIM	1	KHS-31	843654128948	P6HI0AME
				S-FHLISV
				S-RBJ2VD

CATALOG NUMBER BREAKDOWN

KT-FLED15-R1A-UNV-8CSB-VDIM

1 2 3 4 5 6 7 8 9 10 11 12 13

1 Keystone Technologies
2 Fixture Type
3 LED Lamp
4 Max Wattage
5 Shape
6 Series Designation
7 Distribution
8 Mounting
9 CRI
10 Color
11 Color Select Designation
12 Dimming
13 Housing Color

2 Fixture Type

F	Flood

5 Shape

R	Rectangular

6 Series Designation

1	General Purpose Floodlight

7 Distribution

A	NEMA 7H × 7V

8 Mounting

UNV	Universal

9 CRI

8	>80

10 Color

CS	Color Select

11 Color Select Designation

B	3000/4000/5000K

12 Dimming

VDIM	0–10V

13 Housing Color

	Bronze
W	White

***Note:** Special order housing color options have extended lead times.*

ORDERING EXAMPLES

FIXTURE WITH SINGLE FACTORY-INSTALLED ACCESSORY

KT-FLED15-RIA-UNV-8CSB-VDIM /515P6

KEYSTONE FIXTURE

CATALOG NUMBER
KT-HBLED60-1.5F-840-VDIM-P /G2

CORD SETS

✓	SUFFIX	CATALOG NUMBER
✓	/515P6	KT-CS-515P-6-18/3

** When ordering more then one factory-installed accessory, use multiple suffixes as shown in the ordering examples above.*
***Note:** All accessories can also be ordered separately for field installation using just their regular Catalog Number, UPC, or Easy Code.*