KT-CLED-BP-15-W

CANOPY BACK PLATE

DESCRIPTION

15” white mounting back plate for canopy fixtures

*Canopy fixture sold separately

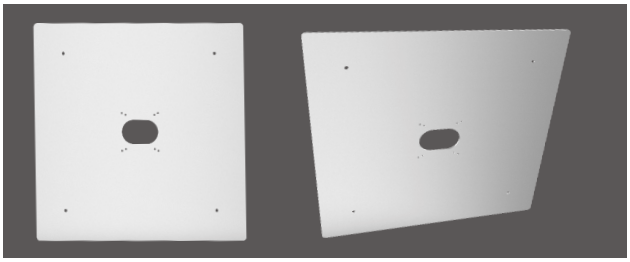

DIMENSIONS

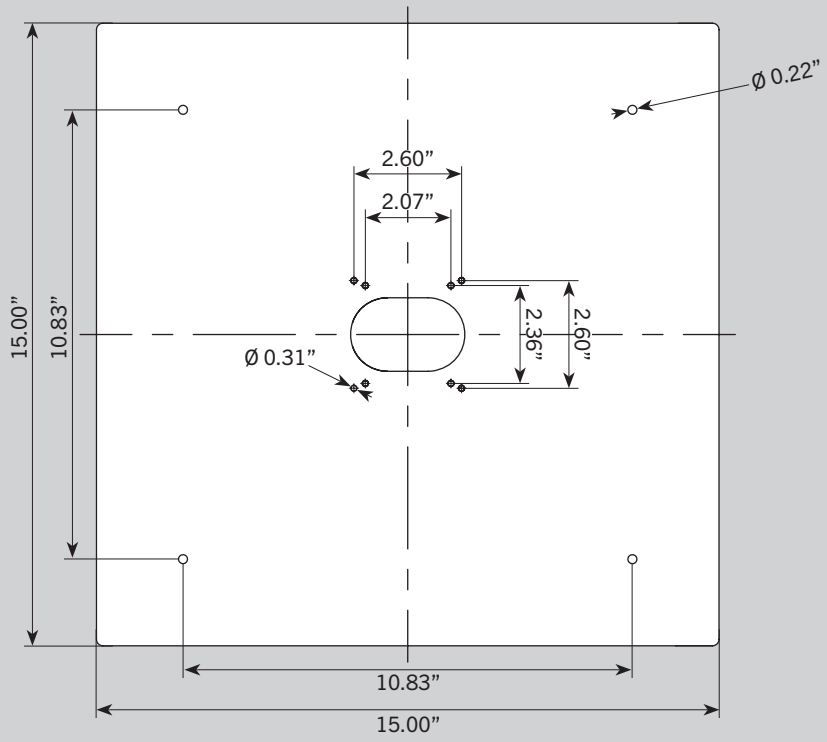

ORDERING INFORMATION

CATALOG NUMBER	CARTON QTY.	EASY CODE	UPC
KT-CLED-BP-15-W	10	CEU-41	843654152035

CATALOG NUMBER BREAKDOWN

KT-CLED-BP-15-W

1 2 3 4 5

1 **Keystone Technologies**
2 **Canopy Fixture**
3 **LED**
4 **Back Plate**
5 **Size**
6 **Color**