KT-ALED140PS-M2-OSB-PMA-8CSB-VDIM-P

POLE MOUNTED LED AREA LIGHT PREMIUM PACKAGE

DESCRIPTION

140W Power and Color Select Optic Swap Area Light | 120-277V Input | Bronze Housing | Adjustable Pole Mount Kit Included

APPLICATION

Pole-mount or structure-mount outdoor illumination needs (including parking lots, auto dealerships, pathways, roadways, recreational venues, and other general area lighting requirements)

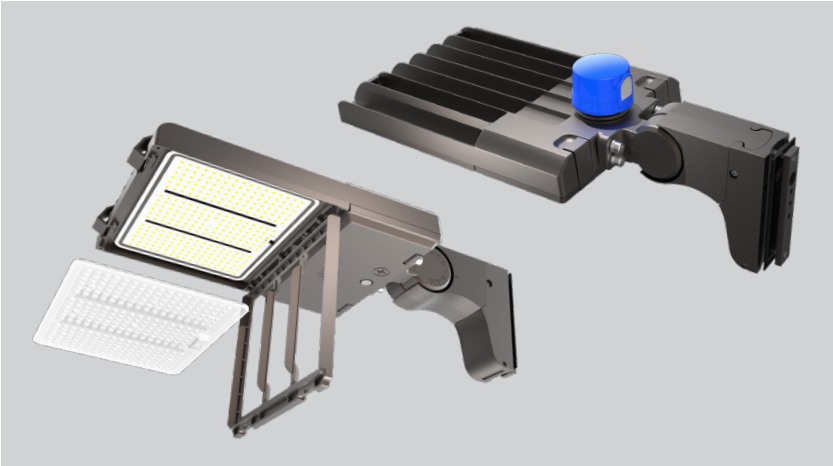

PRODUCT FEATURES

- Keystone Power Select technology (140/100/70W)
- Keystone Color Select technology (3000/4000/5000K)
- Innovative optic swap capability under door frame and latch design for quick lens change
- Three lenses in the box: Type III installed, Types IV and V included
- Type II lens sold separately. See below for details
- Heavy duty die cast aluminum housing with ample heat sinking
- Low-profile design delivers high-performance illumination and improves application site aesthetics
- True U0 design for Dark Sky friendly performance that eliminates undesirable sky glow
- Integrated NEMA/ANSI C136.10 7-pin twist-lock receptacle with 3-pin photocell and shorting cap. Standard on all fixtures, simplifies ordering requirements for photo control needs
- Comes with a pre-installed adjustable pole mount kit for easy and quick mounting to square or round poles
- Keystone 0-10V dimming driver
- Ambient operating temperature: –40°C/–40°F to 50°C/122F
- UL Certified, IP65 rated
- Power factor: > 0.95
- THD: < 20%
- LED chip lifetime: L70 > 100,000 hrs @ 25C°/77°F ambient fixture temperature
- Meets FCC Part 15, Part B, Class A standards for conducted and radiated emissions

PRODUCT SPECIFICATIONS

Catalog No.	Wattage	CCT	Lumens	Efficacy	Input Voltage	Dimming	CRI	Distribution Pattern	Photocell Included	Housing Color	Legacy Equivalent
KT-ALED140PS-M2-OSB-PMA-8CSB-VDIM-P	140W	3000K	17950	128 lm/W	120-277V	0-10V	>80	Type III Installed, Types IV and V Included	Yes	Bronze	400W MH
		4000K	20780	148 lm/W							
		5000K	19020	136 lm/W							
	100W	3000K	12720	127 lm/W							
		4000K	14750	148 lm/W							
		5000K	13530	135 lm/W							
	70W	3000K	9310	133 lm/W							
		4000K	10740	153 lm/W							
		5000K	9880	141 lm/W							

** Type II (2) lens sold separately. For more information, see Accessories page below or contact Keystone with questions.*

***Fixtures (and mounts) with alternate housing colors are available and made to order. Extended lead times apply. Please see catalog number breakdown for full ordering code details.*

KT-ALED140PS-M2-OSB-PMA-8CSB-VDIM-P

POLE-MOUNT LED AREA LIGHT PREMIUM PACKAGE

PHYSICAL SPECIFICATIONS

POLE-MOUNT LED AREA LIGHT FIXTURE

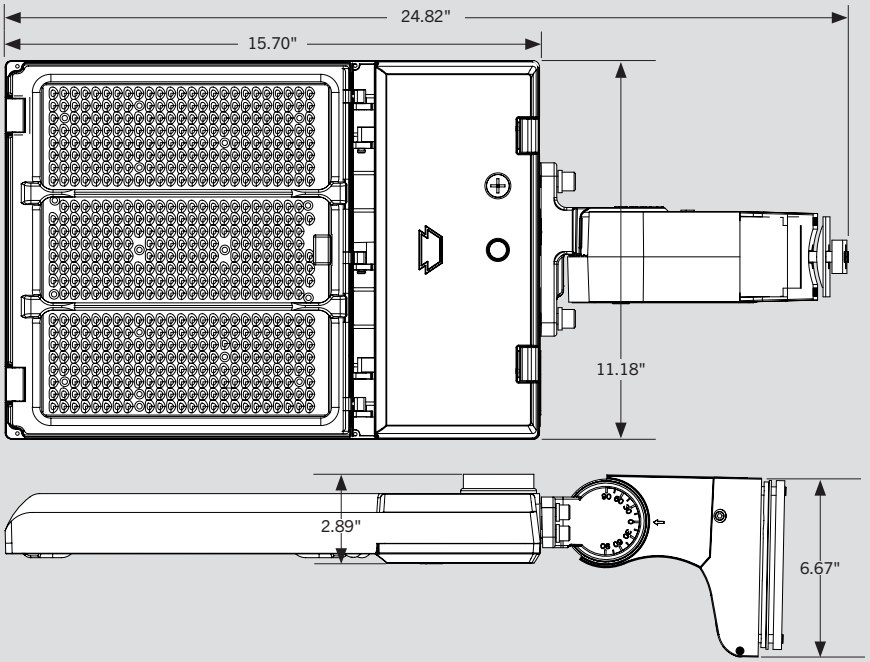

PACKAGING

Carton Quantity	1 piece
Carton Dimensions	5.63"H × 13.15"W × 26.57"L
Carton Weight	16.53 lbs

ADJUSTABLE POLE MOUNT KIT DRILLING HOLES

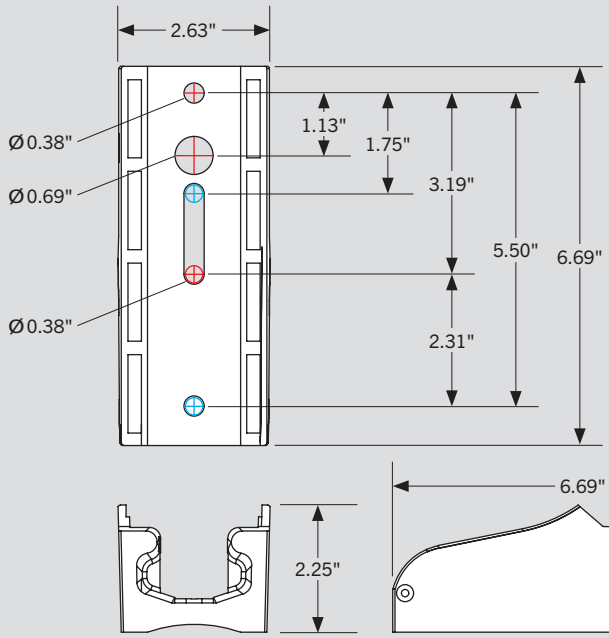

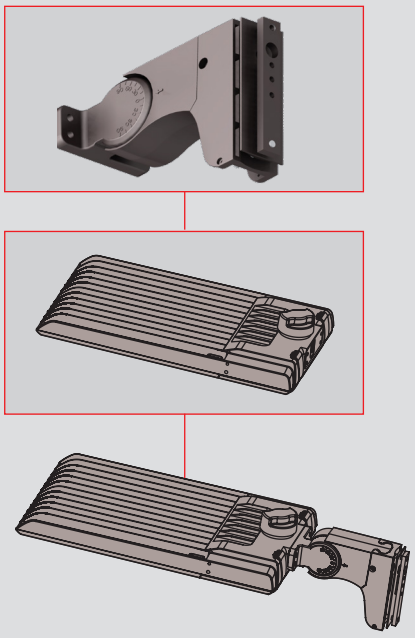

KT-ALED140PS-M2-OSB-PMA-8CSB-VDIM-P

POLE-MOUNT LED AREA LIGHT PREMIUM PACKAGE

WIRING DIAGRAM

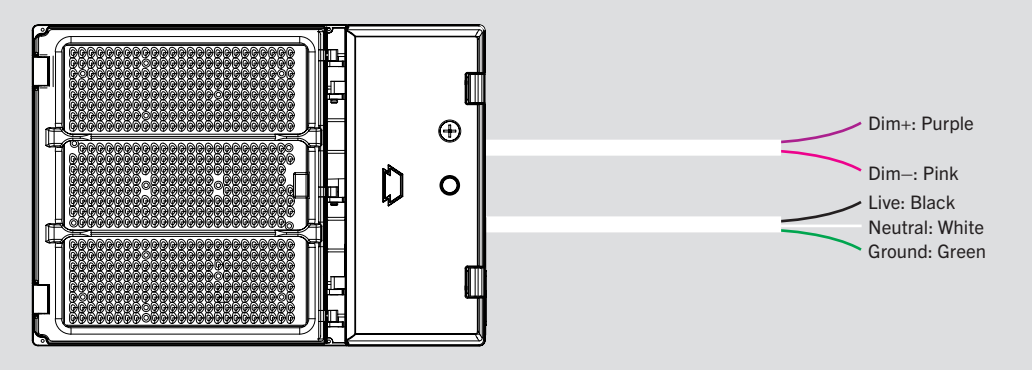

- This fixture comes pre-wired with a 7-pin twist-lock receptacle with shorting cap.
  Make input connections as needed and ensure connections are protected from exposure to the elements.
- **Input voltage rating: 120–277V**
- Ensure that input voltage on site matches the fixture you intend to install.

POWER SELECT (WATTAGE) AND COLOR SELECT (CCT) ADJUSTMENT

This fixture is equipped with field-adjustable Keystone Power Select and Color Select technology.

1. Ensure power is off to the fixture.
2. Open the driver compartment located on the underside of the fixture.
3. Adjust switches to desired settings.

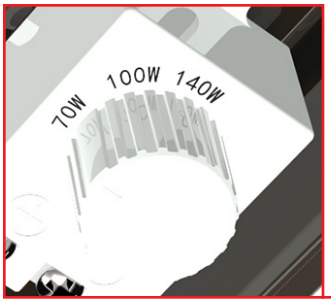

POWER SELECT ADJUSTMENT DIAL
Set switch to adjust wattage between 140W, 100W, and 70W.
Fixture comes preset at 140W.

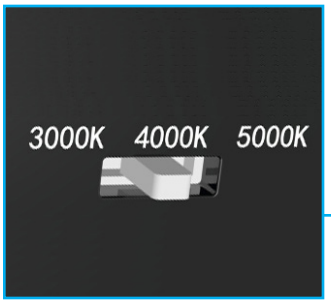

COLOR SELECT ADJUSTMENT SWITCH
Set switch to adjust CCT between 3000K, 4000K, and 5000K.
Fixture comes preset at 5000K.

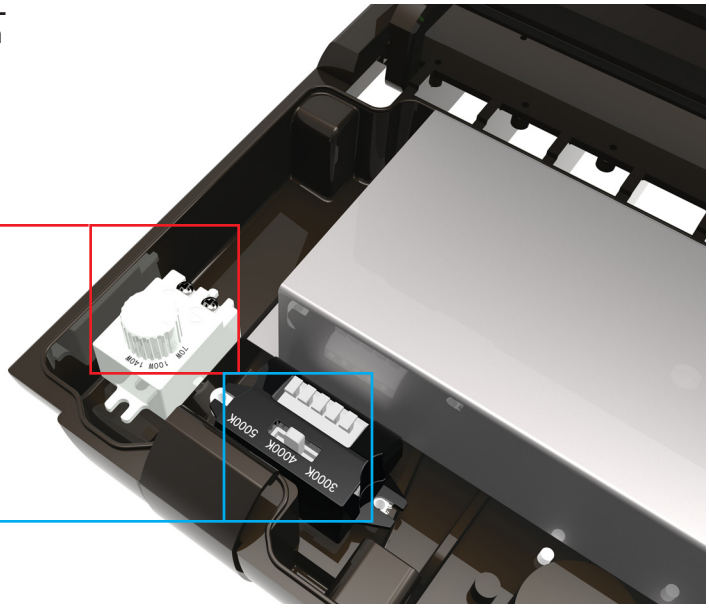

KT-ALED140PS-M2-OSB-PMA-8CSB-VDIM-P

POLE-MOUNT LED AREA LIGHT PREMIUM PACKAGE

LIGHT DISTRIBUTION PATTERN

Photometric layouts for general reference only. All fixtures are pole mounted at 30ft. Each square is 10 ft x 10 ft

TYPE III (3)

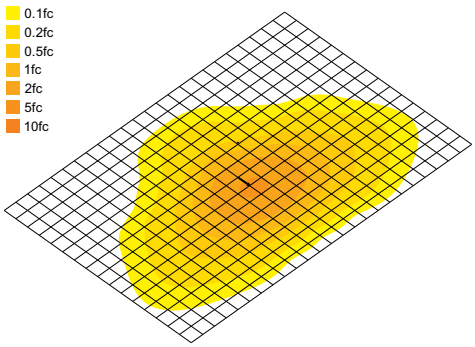

TYPE IV (4)

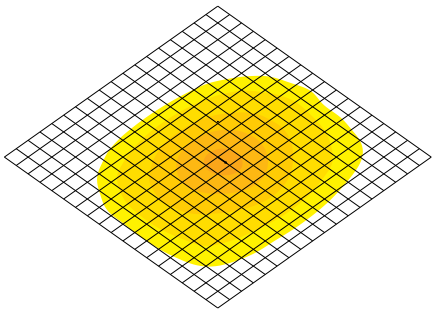

TYPE V (5)

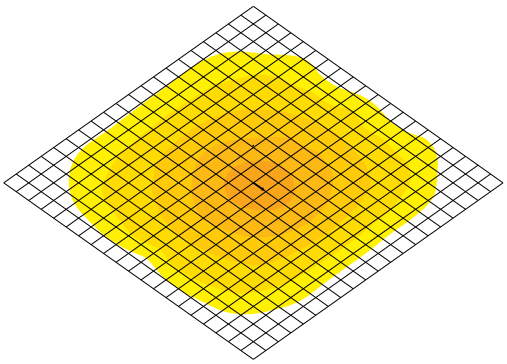

PHOTOMETRIC SPECIFICATIONS (TYPE III [3])

ISOCANDELA PLOT

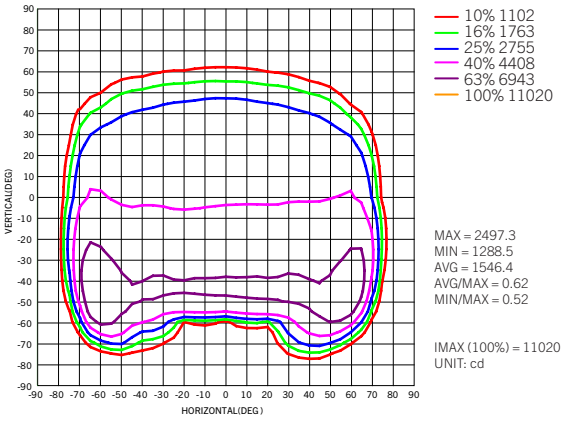

MAX = 2497.3
MIN = 1288.5
AVG = 1546.4
AVG/MAX = 0.62
MIN/MAX = 0.52

IMAX (100%) = 11020 cd
UNIT: cd

LUMINOUS INTENSITY DISTRIBUTION

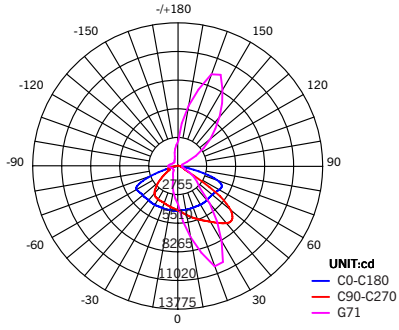

PHOTOMETRIC SPECIFICATIONS (TYPE IV [4])

ISOCANDELA PLOT

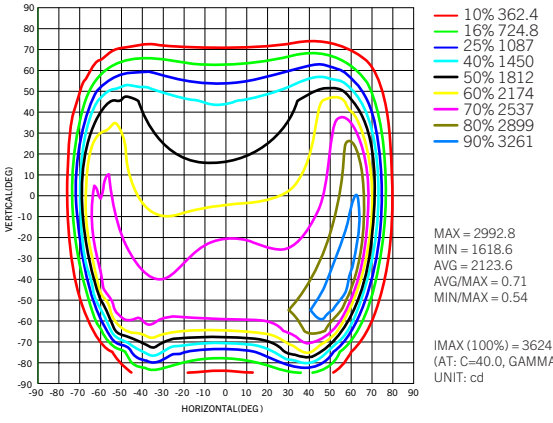

MAX = 2992.8
MIN = 1618.6
AVG = 2123.6
AVG/MAX = 0.71
MIN/MAX = 0.54

IMAX (100%) = 3624 (H45.0, V-60.0)
(AT: C=40.0, GAMMA=69.5)
UNIT: cd

LUMINOUS INTENSITY DISTRIBUTION

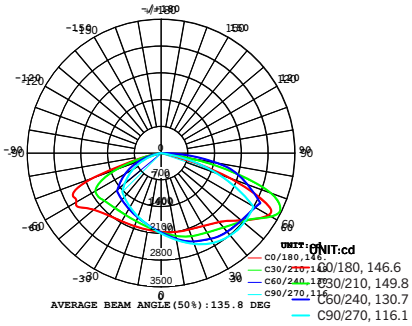

KT-ALED140PS-M2-OSB-PMA-8CSB-VDIM-P

POLE-MOUNT LED AREA LIGHT PREMIUM PACKAGE

PHOTOMETRIC SPECIFICATIONS (TYPE V [5])

ISOCANDELA PLOT

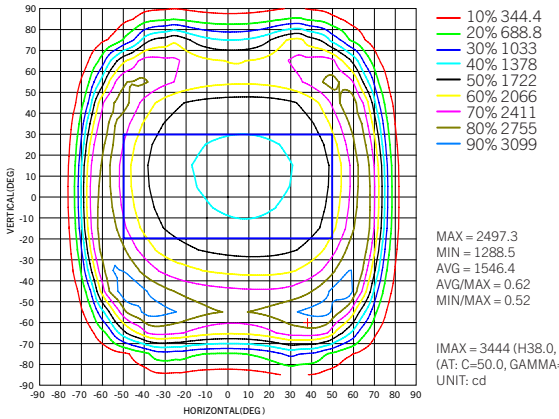

LUMINOUS INTENSITY DISTRIBUTION

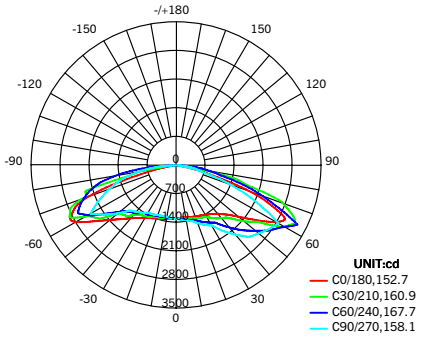

EPA SPECIFICATIONS

MEDIUM-SIZE FIXTURE HOUSING

- Conditions: Horizontal winds only for calculations. Worst case total projected area used for calculations.
- All drag coefficients are set as worst case 1.2.
- For details on exact EPA calculations and assumptions, please contact productsupport@keystonetech.com

EPA Calcs (1.2*ft^2 | View)		Single Fixture	2 Fixtures at 90º	2 Fixtures at 180º	3 Fixtures at 90º	3 Fixtures at 120º	4 Fixtures at 90º	2 Fixtures Side-by-Side	3 Fixtures Side-by-Side	4 Fixtures Side-by-Side
Mounting Application	**Fixture Position**									
Adjustable Pole Mount	Horizontal	0.50 sq. ft.	0.78 sq. ft.	1.01 sq. ft.	1.19 sq. ft.	1.28 sq. ft.	1.19 sq. ft.	0.74 sq. ft.	1.11 sq. ft.	1.48 sq. ft.
Adjustable Pole Mount	45º	1.27 sq. ft.	1.73 sq. ft.	1.27 sq. ft.	2.20 sq. ft.	3.10 sq. ft.	2.20 sq. ft.	2.53 sq. ft.	3.80 sq. ft.	5.07 sq. ft.

KT-ALED140PS-M2-OSB-PMA-8CSB-VDIM-P

POLE-MOUNT LED AREA LIGHT PREMIUM PACKAGE

ACCESSORIES (SOLD SEPARATELY)

SENSORS

Factory-Installable OR Field-Installable (field-installable purchased separately)

✓	SUFFIX*	CATALOG NUMBER	DESCRIPTION	UPC	EASY CODE
	/MW3	KTS-MW3-12V-PKO	12V Microwave Occupancy Sensor	843654130637	TRM-32
	/FC3	KTSL-FC3-12V-PKO-PIR	Bluetooth mesh wireless Smart Port LED controller for SmartLoop system with integrated daylight and PIR motion sensor.	843654138862	OCW-60
	/FC4	KTSL-FC4-12V-PKO	Bluetooth mesh wireless screw-in low voltage fixture controller for SmartLoop system	843654149066	RUN-10




Microwave Occupancy Sensor
KTS-MW3-12V-PKO




Smart Port LED Controller
KTSL-FC3-12V-PKO-PIR



Screw-In Fixture Controller
KTSL-FC4-12V-PKO

** For factory installation of accessory, add suffix to fixture part number (see ordering examples and instructions on last page of spec sheet).*

Field-Installable / Field-Use ONLY (purchased separately)

CATALOG NUMBER	DESCRIPTION	UPC	EASY CODE
KTS-MW3-REMOTECONTROL	Remote Control for KTS-MW3-12V-XX Sensors, Sets/adjusts all sensor performance parameters	843654132020	XSR-61



Remote Control
KTS-MW3-REMOTECONTROL

LENSES

Field-Installable / Field-Use ONLY (purchased separately)

CATALOG NUMBER	DESCRIPTION	UPC	EASY CODE
KT-ALED-LENS-M2-2CS-KIT	Type II Optics Lens for Color Select, Medium Size Housing, Series 2 Area Lights	843654153933	ICD-51

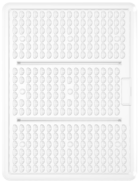

Lenses
KT-ALED-LENS-M2-2CS-KIT

KT-ALED140PS-M2-OSB-PMA-8CSB-VDIM-P

POLE-MOUNT LED AREA LIGHT PREMIUM PACKAGE

ACCESSORIES CONTINUED (SOLD SEPARATELY)

MOUNTS AND BRACKETS

Field-Installable / Field-Use ONLY (purchased separately)

CATALOG NUMBER	DESCRIPTION	UPC	EASY CODE
KT-ALED-GS-M2-KIT	Reversible Glare Shield for Medium Size Housing, Series 2 Area Lights, Bronze	843654153797	HEM-55



Glare Shield
KT-ALED-GS-M2-KIT

** For factory installation of accessory, add suffix to fixture part number (see ordering examples and instructions on last page of spec sheet).*

ORDERING INFORMATION

ORDER CODE	PACK QTY.	UPC	Easy Code
KT-ALED140PS-M2-OSB-PMA-8CSB-VDIM-P	1	843654153087	WEN-81

CATALOG NUMBER BREAKDOWN

KT-ALED140PS-M2-OSB-PMA-8CSB-VDIM-P

1 2 3 4 5 6 7 8 9 10 11 12 13 14 15

1 Keystone Technologies
2 Fixture Type
3 LED Technology
4 Max Wattage
5 Power Select
6 Size/Shape
7 Style/Design Designation
8 Optic Swap
9 Optic Swap Designation
10 Pole Mount Adjustable
11 80 CRI
12 Color Select
13 Color Select Designation
14 0-10V Dimming
15 Stock Package

9 Optic Swap Designation

B	Type III lens installed, Type IV and V lens included

13 Color Select Designation

B	3000/4000/5000K

ORDERING EXAMPLES

FIXTURE WITH SINGLE FACTORY-INSTALLED ACCESSORY

KT-ALED140PS-M2-OSB-PMA-8CSB-VDIM-P /FC3

FIXTURE WITH NO FACTORY-INSTALLED ACCESSORIES

KT-ALED140PS-M2-OSB-PMA-8CSB-VDIM-P

KEYSTONE FIXTURE

CATALOG NUMBER
KT-ALED140PS-M2-OSB-PMA-8CSB-VDIM-P

SENSORS

✓	SUFFIX	CATALOG NUMBER
✓	/FC3	KTSL-FC3-12V-PKO-PIR

** When ordering more then one factory-installed accessory, use multiple suffixes as shown in the ordering examples above.*
***Note:** All accessories can also be ordered separately for field installation using just their regular Catalog Number, UPC, or Easy Code.*