EdgeLine Cuttable Light Bar

LED Lighting System

24 Volt

GELW4871-1, GELW4865-1, GELW4850-1,
GELW4841-1, GELW4832-1, GELW1265-1,
GELW4850-1WH

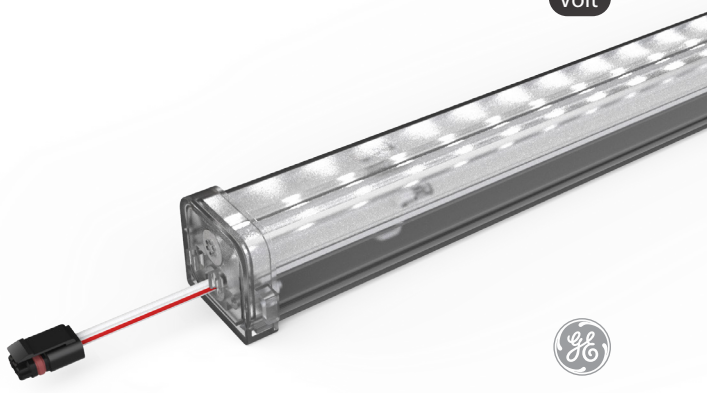

STOP BEFORE YOU BEGIN

Read these instructions completely and carefully.

BG Българската версия на инструкциите за инсталаця и информация за безопасност могат да бъдат намерени на следния адрес: https://www.led.com/eu-en

CS Návod k montáži a bezpečnostní informace v češtině najdete zde: https://www.led.com/eu-en

DA Den danske version af installationsvejledningen og sikkerhedsoplysninger kan findes på følgende placering: https://www.led.com/eu-en

DE Die deutsche Version der Installationsanleitung und Sicherheitsinformationen finden Sie in folgendem Verzeic: https://www.led.com/eu-en

EL Μπορείτε να βρείτε την ελληνική εκδχή των οδηγιών νγκατάστασης και των πληροφοριών ασφάλειας στην εξής τοποθεσία: https://www.led.com/eu-en

ES La versión española de las instrucciones de instalación y la información sobre seguridad puede encontrarse en la siguiente ubicación: https://www.led.com/eu-en

ET Eestikeelse paigaldusjuhendi ja ohutusnñuded leiate aadressilt: https://www.led.com/eu-en

FI Asennusohjeiden ja turvallisuustietojen suomenkielinen versio löytyy seuraavasta paikasta: https://www.led.com/eu-en

FR La version française des instructions d'installations et information de sécurité est disponible à l'adresse suivante: https://www.led.com/eu-en

HR Hrvatska verzija priručnika za ugradnju i sigurnosnih informacija nalazi se na sljedečoj lokaciji: https://www.led.com/eu-en

HU A telepítési útmutató és a biztnosági információk magyar nyelvű változata az alábbi címen található: https://www.led.com/eu-en

IT La versione italiana del manuale di installazione e sicurezza può essere reperita nella seguente sezione: https://www.led.com/eu-en

LT Lietuviška diegimo instrukcijos ir saugos informacijos versiją galima rasti šioje vietoje: https://www.led.com/eu-en

LV Uzstādīšanas instrukciju un drošības informāciju latviešu valodā var atrast šeit: https://www.led.com/eu-en

NL De Nederlandse versie van de installatie-instructies en veiligheidsinformatie kan op de volgende locatie worden gevonden: https://www.led.com/eu-en

PL Polską wersję instrukcji instalacji oraz informacje dotyczące bezpieczeństwa można znaleźć w następującej lokalizacji: https://www.led.com/eu-en

PT A versão em Português das instruções de instalação e das informações de segurança pode ser encontrada na seguinte localização: https://www.led.com/eu-en

RO Versiunea în limba română a instrucţiunilor de instalare şi a informaţiilor de siguranţă pot fi găsite la: https://www.led.com/eu-en

SV Ni hittar den svenska versionen av installationsanvisningarna och säkerhetsinformationen på följande plats: https://www.led.com/eu-en

SL Previdnostna opozorila in varnostne informacije so na zadnji strani vodnika za namestitev. Pred začetkom namestitve izdelka jih skrbno preberite: https://www.led.com/eu-en

SK Slovenskú verziu montažnej príručky a bezpečnostných instrukcií nájdete na nasledujúcej lokalite: https://www.led.com/eu-en

For the latest North American install guides for your product go to: https://www.led.com
For the latest European install guides for your product go to: https://www.led.com/eu-en

Prepare Electrical Wiring

FOR UL ONLY

Electrical Requirements

- Acceptable for use in dry and damp locations.
- The grounding and bonding of the LED Driver shall be done in accordance with National Electric Code (NEC) Article 600.
- Follow all National Electric Codes (NEC) and local codes.
- These products are only suitable for connection to a circuit from a Class 2 power source. These products have not been evaluated for use when connected to a power source that does not comply with Class 2 voltage and energy limited supplies.

Save These Instructions

Use only in the manner intended by the manufacturer.
If you have any questions, contact the manufacturer.

UL CERTIFIED
SAFETY US•CA
SÉCURITÉ US•CA
E229508

RETROFIT SIGN CONVERSION LED KIT FOR USE ONLY IN ACCORDANCE WITH KIT INSTRUCTIONS.

KIT IS COMPLETE ONLY WHEN ALL PARTS REQUIRED BY THE INSTRUCTIONS ARE PRESENT.

TROUSSE DE CONVERSION À DEL POUR LA MODERNISATION DES ENSEIGNES
À UTILISER CONFORMÉMENT AU GUIDE D'INSTALLATION.

© 2025 Current Lighting Solutions, LLC. All rights reserved. GE and the GE monogram are trademarks of the General Electric Company and are used under license. Information provided is subject to change without notice. All values are design or typical values when measured under laboratory conditions.

⚠ WARNING / AVERTISSEMENT

RISK OF ELECTRIC SHOCK
- Turn power off before inspection, installation or removal.
- Properly ground power supply enclosure.

RISK OF FIRE
- Use only suitably approved wire for input/output connections. Minimum size 18 AWG (0.82mm^2)
- Follow all local codes.
- Not to be submerged or used in a marine environment.

RISQUES DE DÉCHARGES ÉLECTRIQUES
- Coupez l'alimentation avant l'inspection, l'installation ou le déplacement.
- Assurez-vous de correctement mettre à terre l'alimentation électrique.

RISQUES D'INCENDIE
- N'utilisez que des fils approuvés par UL pour les entrées/sorties de connexion. Taille minimum 18 AWG (0.82mm^2)
- Respectez tous les codes locaux.
- Ne pas submerger ou installer dans un environement marin.

⚠ UL WARNING / AVERTISSEMENT UL

RISK OF FIRE OR ELECTRIC SHOCK
- LED Retrofit Kit installation requires knowledge of sign electrical systems. If not qualified, do not attempt installation. Contact a qualified electrician.
- Install this kit only in host signs that have been identified in the installation instructions and where the input rating of the retrofit kit does not exceed the input rating of the sign.
- Installation of this LED retrofit kit may involve drilling or punching of holes into the structure of the sign. Check for enclosed wiring andcomponents to avoid damage to wiring and electrical parts.
- Do not make or alter any open holes in an enclosure of wiring or electrical components during kit installation.

RISQUE D'INCENDIE OU DE CHOC ÉLECTRIQUE
- L'installation de l'équipement de remplacement DEL exige la connaissance des systèmes électriques pour enseignes. Si non qualifié, ne tentez pas d'installation. Veuillez contacter un électricien qualifié.
- Risque d'incendie ou de choc électrique. Installez cet ensemble seulement dans des enseignes hôtes qui ont été identifiés dans les instructions d'installation et dont la capacité d'entrée de l'ensemble ne dépasse pas la capacité d'entrée de l'enseigne.
- L'installation de cet équipement de remplacement DEL peut impliquer le perçage ou le poinçonnage de trous dans la structure du panneau Vérifiez le câblage et les composants inclus pour éviter d'endommager le câblage et les composants électriques.
- Ne pas faire ou modifier les trous ouverts dans une enceinte de câblage ou de composants électriques pendant l'installation de cet équipement de remplacement DEL.

This device complies with part 15 of the FCC Rules. Operation is subject to the following two conditions: (1) This device may not cause harmful interference, and (2) this device must accept any interference received, including interference that may cause undesired operation.

Note: This equipment has been tested and found to comply with the limits for a Class A digital device, pursuant to part 15 of the FCC Rules. These limits are designed to provide reasonable protection against harmful interference when the equipment is operated in a commercial environment. This equipment generates, uses, and can radiate radio frequency energy and, if not installed and used in accordance with the instruction manual, may cause harmful interference to radio communications. Operation of this equipment in a residential area is likely to cause harmful interference in which case the user will be required to correct the interference at his own expense.

This Class [A] RFLD complies with the Canadian standard ICES-005. Ce DEFR de la classe [A] est conforme à la NMB-005 du Canada.

Any changes or modifications not expressly approved by the party responsible for compliance could void the user's authority to operate this equipment.

Components and Tools Required

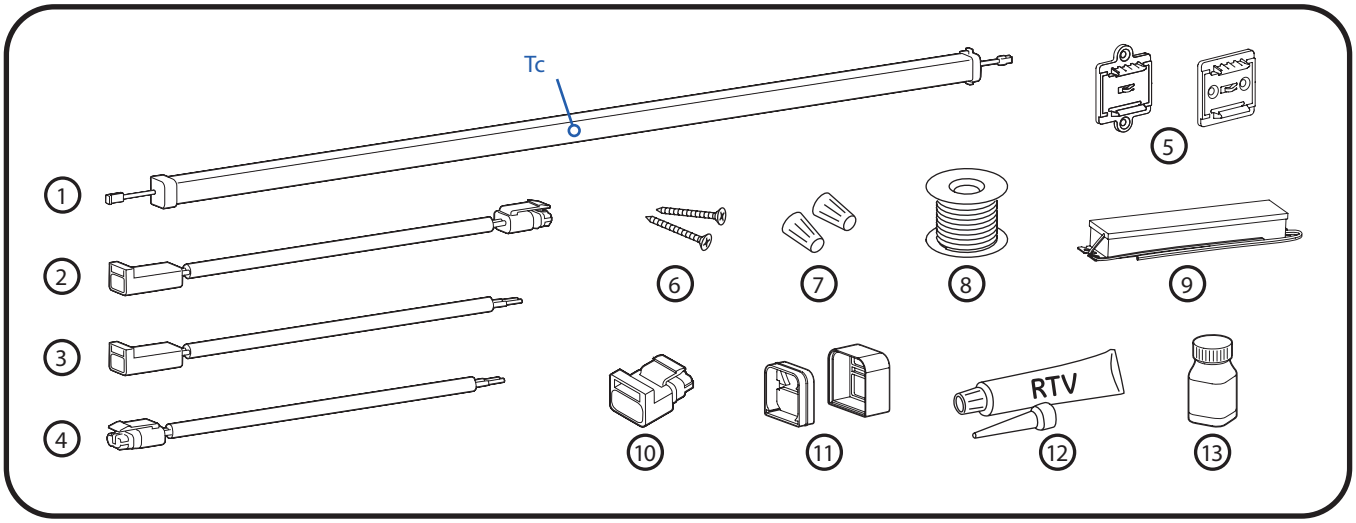

1. Tetra® EdgeLine Cuttable Light Bar
2. Jumper cable with male and female connector
3. Leader cable with female connector
4. Leader cable with male connector
5. Mounting clips (88818 – standard), or (10734 – slim)
6. #10 (M5) self-tapping flathead screws
7. UL approved 22-18 AWG (0.33-0.82 mm2) connectors or in-line/IDC connectors
8. UL approved 18 AWG (0.82 mm2) supply wire
9. 24 Volt Power Supply
10. Connector sealing cover
11. Seal Gasket and Cap
12. Electrical grade silicone.
    Examples of electrical grade silicone:
    - Momentive RTV 6702 (white) / RTV 6708 (clear) - Silicone Rubber Adhesive Sealant
    - Momentive RTV 162 (White) - Silicone Rubber Adhesive Sealant-Electrical Grade
    - Dow Corning 3140 (clear) - Non-Corrosive Flowable
    - Dow Corning 3145 (clear or gray) - Non-Corrosive Non-flowable
    - Dow Corning RTV 748 (white) - Non-Corrosive Sealant
13. Brush Conformal Coat such as the following:
    - MG Chemicals 419D
    - Humiseal 1B73, or
    - Electrolube APL

SKU	Product Code	Detailed Description
93155625	GE-JC24IN-66M-66F	24 Inch Jumper Cable with IP66 Male and IP66 Female Connector
93155628	GE- LC24IN-66F	24 Inch Leader Cable with IP66 Female Connector
93155627	GE-LC24IN-66M	24 Inch Leader Cable with IP66 Male Connector

Dimensions

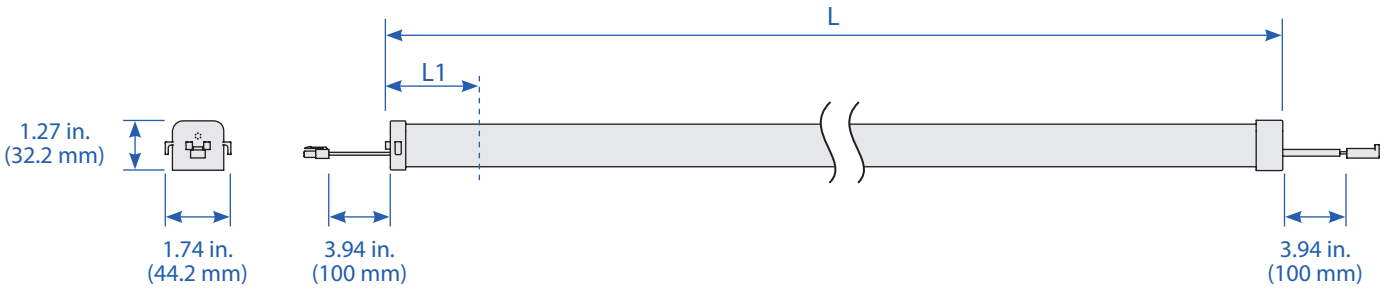

SKU	L	L1 (cutting resolution)
GELW4871-1	47-3/8 in. (1203 mm)	3 in. (76 mm)
GELW4865-1	47-3/8 in. (1203 mm)	3 in. (76 mm)
GELW4850-1	47-3/8 in. (1203 mm)	3 in. (76 mm)
GELW4841-1	47-3/8 in. (1203 mm)	3 in. (76 mm)
GELW4832-1	47-3/8 in. (1203 mm)	3 in. (76 mm)
GELW1265-1	11-5/8in. (295mm)	3 in. (76 mm)
GELW4850-1WH		3 in. (76 mm)

Planning

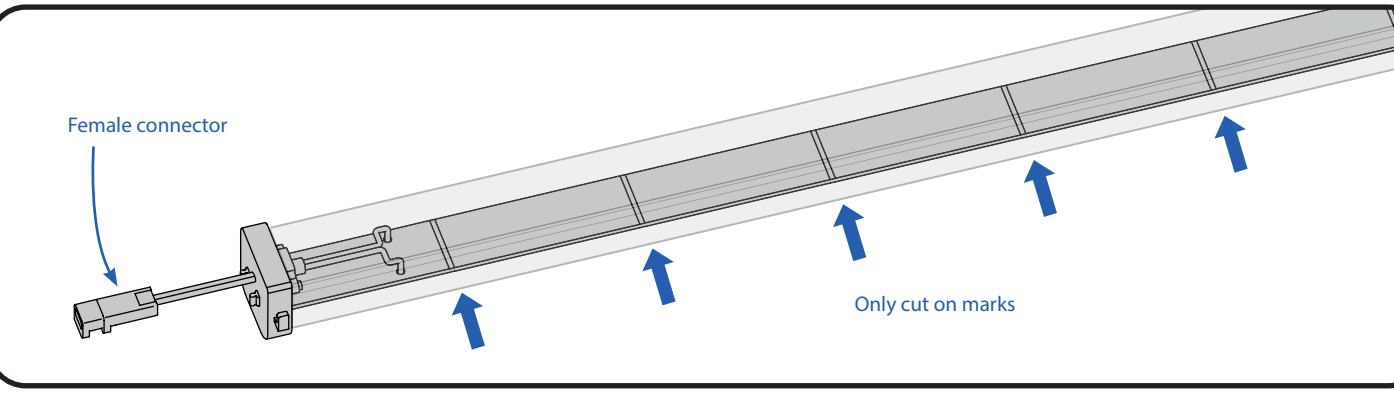

For planning the layout, measure the desired length to be lit and divide by the Light Bar Length (L) in the table above to determine the required quantity of light bars. If it is necessary to cut the light bar for a better fit, the cutting resolution is 3 inches (76.2 mm).

Field Cuts

⚠ WARNING / AVERTISSEMENT

Failure to strictly follow these instructions may subject the installer or others to personal injury. Failure to strictly follow these instructions will also void the manufacturer's warranties and may cause risk of fire, product damage, damage to property, and injury to persons. Please read all warnings contained below and follow all instructions carefully.

Le non-respect des instructions peut exposer l'installateur ou d'autres personnes à des blessures corporelles. Ce non-respect des instructions annule également les garanties du fabricant et peut entraîner des risques d'incendie, d'endommagement du produit, de dommages des matériaux ou de blessures corporelles. Veuillez lire attentivement l'ensemble des recommandations ci-dessous et appliquer méthodiquement toutes les instructions.

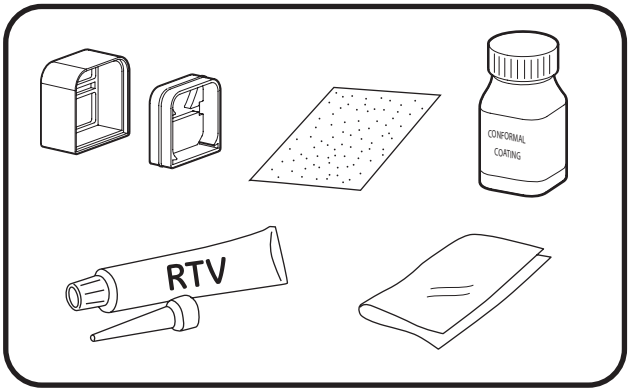

1. Gather materials: Seal gasket and cap, conformal coating, electrical grade silicone, sandpaper, cloth.

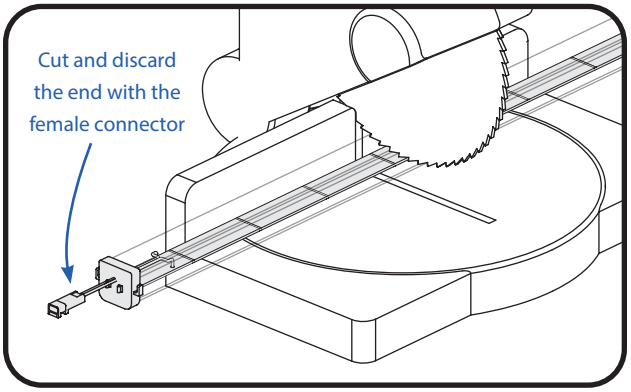

2. If it is necessary to cut the lightbar for a better fit, the cutting resolution is 3 inches (76.2 mm). Cut the lightbar as necessary to fit the application. Only cut the PCBA from the back to the front. DO NOT cut from the LED side to the back.

   NOTE: Perpendicular cuts ONLY. No angled cuts.

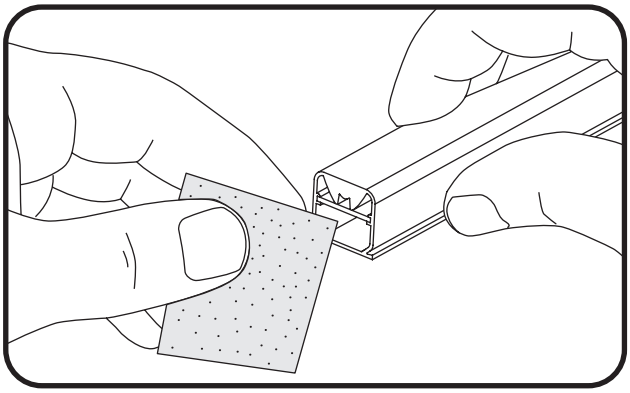

3. Clean debris from extrusion cut end with the sandpaper and avoid sanding the edge of the LED board.

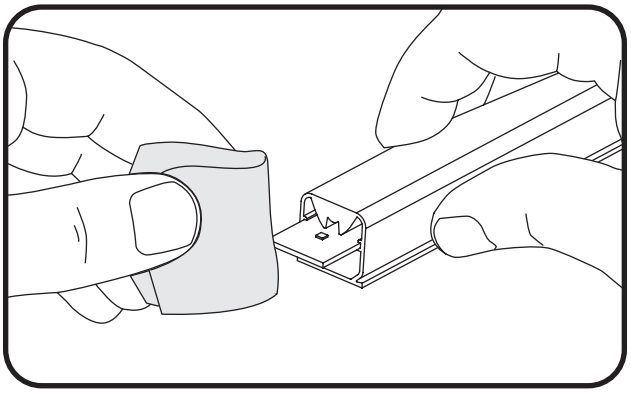

4. Pull out the LED board gently and clean and deburr the cut end with a cloth or other appropriate tool. Be careful not to damage the dielectric, and to ensure no copper from the trace is making contact with the PCB assembly substrate. Finally, shake or blow out any dust and debris from the extrusion.

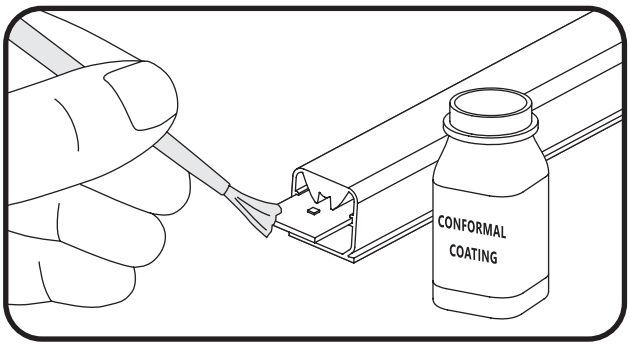

5 Apply and seal the cut end of the LED board with a brush-on conformal coating such as MG Chemicals 419D, Humiseal 1B73, or Electrolube APL. Allow at least 10 minutes to dry.

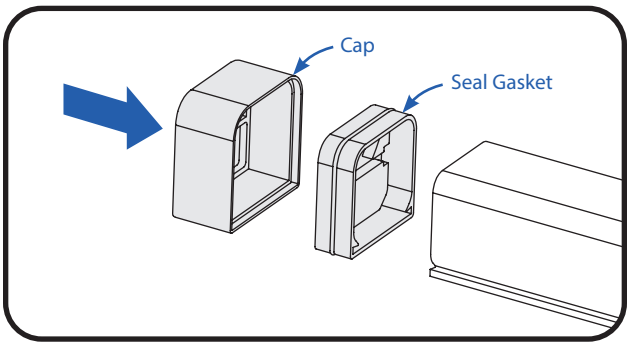

6 Push the GELWCAP seal gasket and cap over the cut end of the light bar.

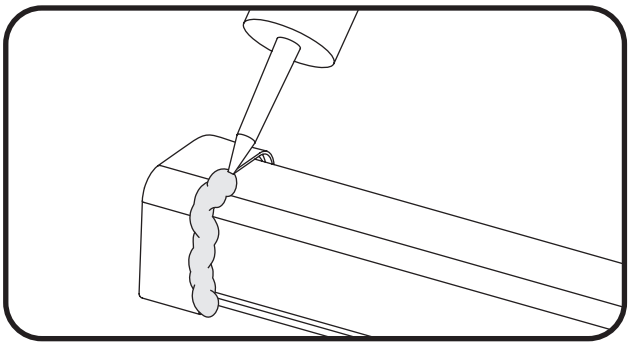

7 Apply electrical grade RTV silicone around the outside circumference of the end cap. Ensure that the silicone completely seals the joint between the end cap and light bar.

⚠ WARNING / AVERTISSEMENT

Field end-cap must create a water tight seal. All debris must be removed to promote a good end-cap bond and to avoid electrical failure. Use of other types of saws and/or use of a dull blade may lead to chipping or cracking of the extrusion or create a cut that cannot be sealed resulting in product failure. Product failures resulting from failure to strictly follow field cut instructions are not covered by any product warranty.

L'embout banc garantit l'étanchéité. Les résidus de la coupe doivent être retirés pour permettre une bonne adhésion de l'embout afin d'éviter toute défaillance électrique. L'utilisation d'un autre type de scie ou d'une lame émoussée peut entraîner l'écaillement ou la fissuration du profil extrudé et peut créer une ouverture ne pouvant pas être scellée avec la possibilité d'une défaillance du produit. Les défaillances de produit résultant du non-respect des instructions de coupe sur chantier ne sont pas couvertes par les garanties du produit.

⚠ SAFETY WARNING / CONSIGNE DE SÉCURITÉ

Failure of field end-cap to maintain a water tight seal may lead to water ingress and product failure. Product failures of this type could result in electrical shock and/or fire and damage to the product and materials which may come in contact with the product.

Tout défaut d'étanchéité de l'embout peut entraîner des infiltrations d'eau et une défaillance du produit. Ce type de défaillances peut provoquer une électrocution et/ ou un incendie et peut aussi endommager les matériaux en contact avec le produit défectueux.

Attaching Light Bar Sections

Planning first:
For multiple bar installations, see the "Maximum Light Bars in Series Connection" specification in the Maximum Loading chart below. Do not exceed the maximum series length per Leader Cable.

Mounting Option A (standard or slim mounting clips)

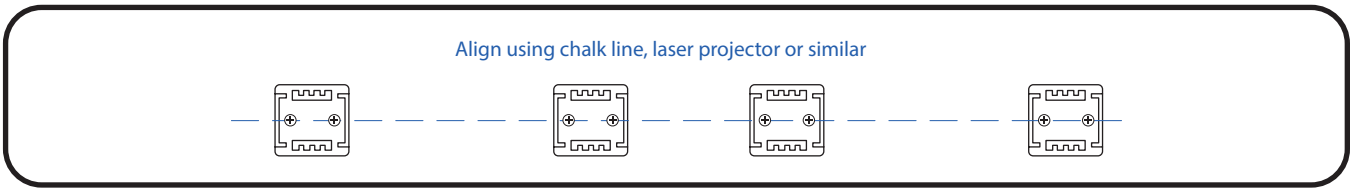

1. Secure two mounting clips per light bar to a rigid flat mounting surface using two #10 (M5) self-tapping flathead screws along the intended run of light bar.

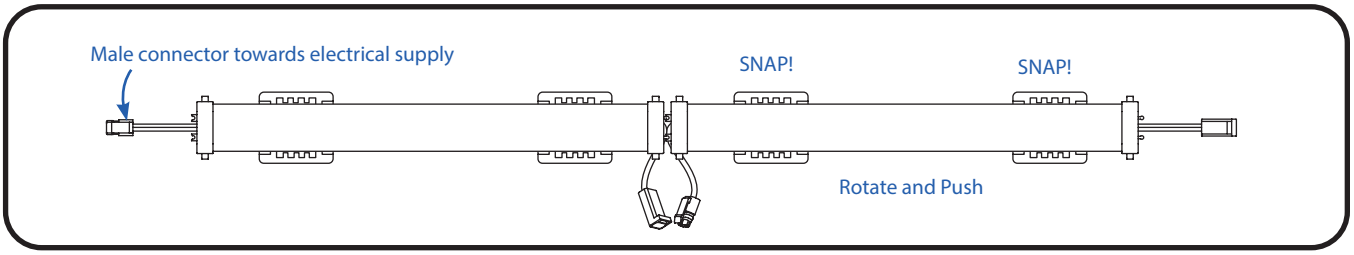

2. Press each light bar into its mounting clips and slide it into the adjacent light so that the alignment features in the end caps mate with each other.

   To avoid stress and damage to light bar the entire mounting surface should be flat and the mounting clips be properly aligned. If the alignment features in the end caps do not mate easily, do not force them together.

   TIP: Align light bar on one side of the mounting clips; then rotate the light bar until it snaps into other side of the mounting clips.

Mounting Option B (standard mounting clips only)

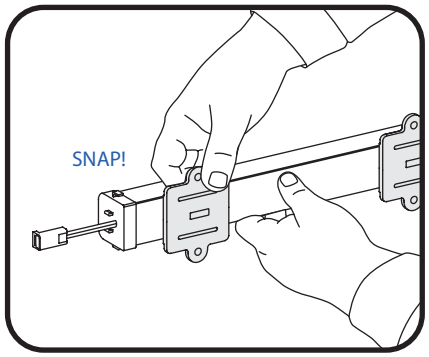

1. Assemble the light bar by pressing two mounting clips onto the light bar. A snapping noise should be heard.

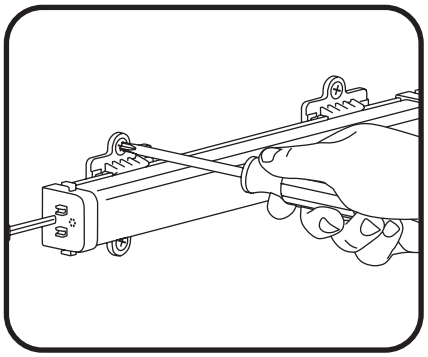

2. Mount the light bar to the desired surface using two #10 (M5) self-tapping flathead screws in each mounting bracket.

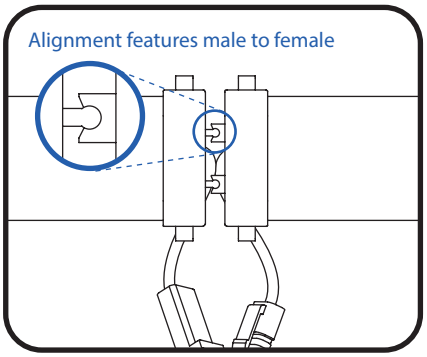

3. Mount the next light bar down the row following steps 1 and 2, being sure to align the light using the alignment features on the end cap.

Electrical Connections

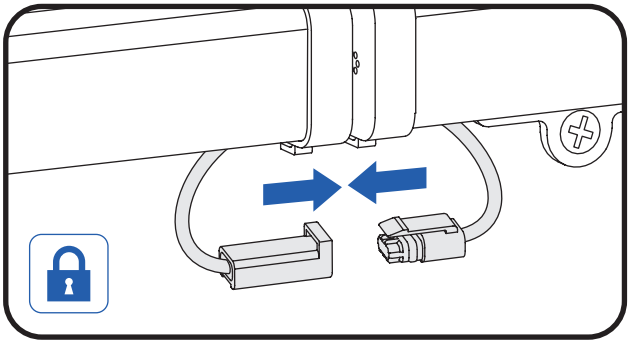

1. Mate the male and female connectors of each adjacent light bar while ensuring the connectors are oriented in the same direction. DO NOT attempt to mate upside down or otherwise exert excessive force on the light bar connectors. Be sure that the retaining clip of the connectors are fully engaged and locked together as indicated by a click. Attach jumper cables as needed to work around any obstacles, corners or separations. DO NOT pull on the wires when un-mating the connectors.

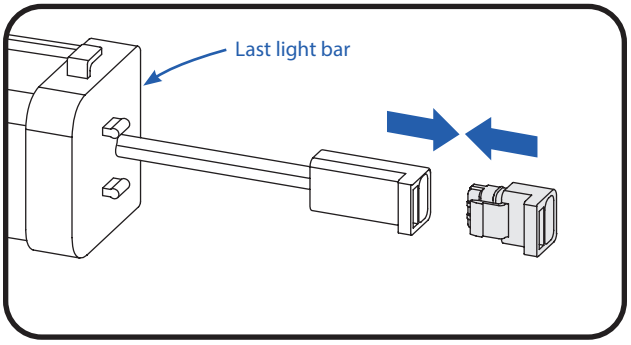

2. Install an end cap into the open connector on the last light bar in the series.

   NOTE: If using leader cable with male connector (GE-LC24IN-66M), connect driver and light bar right side female connector, flip the end cap around and install it into into the open male connector on the last light bar in the series.

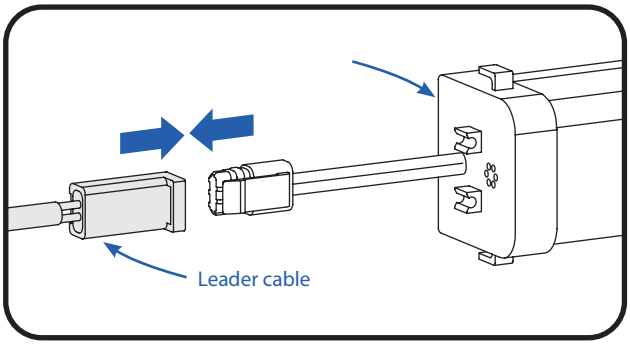

3. Connect the leader cable to the first light bar in the run closest to the power supply.

To Unmate Connectors

- Pushing the plug latch, grasp the connector at each end and pull apart.
- DO NOT pull on the wires when unmating the connectors.

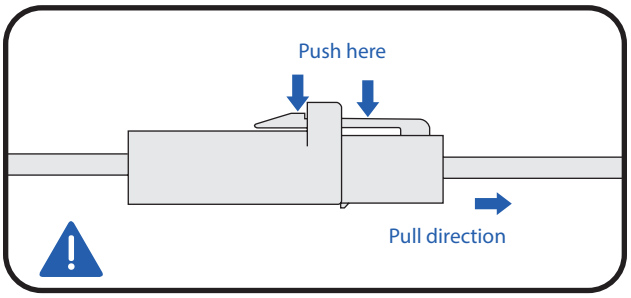

Connect Power Supply

⚠ WARNING/AVERTISSEMENT

RISK OF ELECTRICAL SHOCK: Turn power OFF before inspection, installation or removal.
RISQUES DE CHOC ÉLECTRIQUE: Coupez l'alimentation électrique avant d'inspecter, d'installer ou de déplacer le luminaire.

Must be used with a Class 2, 24 Volt DC Power Supply. Grounding and bonding must be done in accordance with National Electrical Code (Article 600). Refer to the Power Supply Installation Instructions for more information.

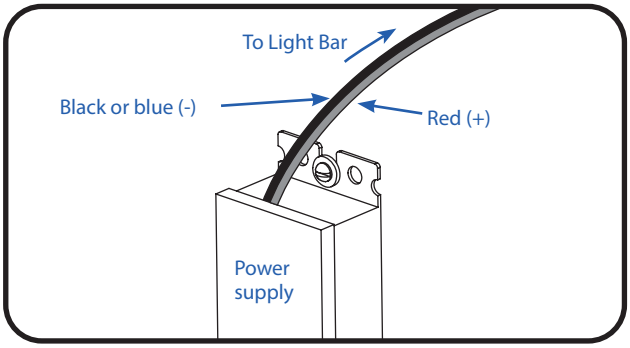

1. Run a wire from the power supply to the leader cable connected to the first light bar in the run.

   NOTE: AC power connection must be contained in an acceptable enclosure.

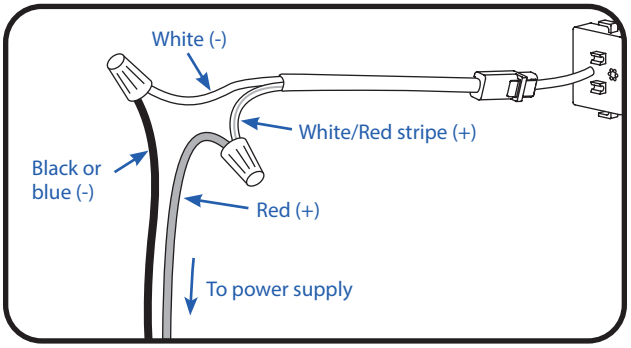

2. Using twist-on wire connectors, connect the white/red stripe wire (+) from the light bar to the red wire (+) of the power supply. Connect the white wire (-) from the light bar to the black or blue wire (-) of the power supply.

NOTE: All electrical connections should be suitably protected from mechanical damage and the environment. Seal all connections in wet locations with electrical grade RTV silicone.

OPTIONAL

A Weather Box (GEXNWB2) may be used to house and seal Class 2 connections.

A) Insert wire connectors into weather box. Fill with electrical grade silicone and close box.

B) Secure the weather box using a #6 or #8 (M2 or M3) screw.

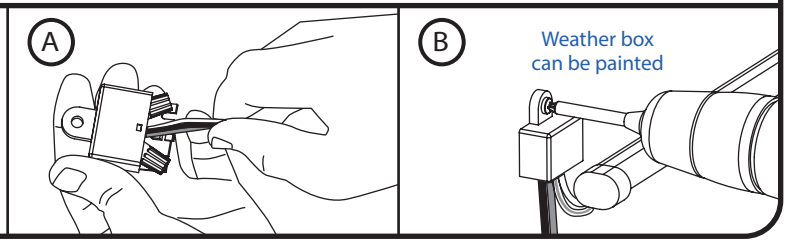

Retrofit Instructions

FOR UL ONLY

1. (Existing Signs Only) Prior to installation, survey the site for information regarding power and accessibility inside and outside the building. Ensure that the branch circuit supplying the existing transformer or ballast will be within the voltage ratings of the new LED power supply, and have a current rating not exceeding 20A, or that permitted by applicable local, state, or country electrical codes (whichever is less).
2. (Existing Signs Only) Remove the existing lighting equipment to be replaced, such as neon tubing or fluorescent tubes; and associated transformers and ballasts. Care should be taken not to break the existing neon or fluorescent tubes. NOTE: Follow all federal and local regulations when disposing of neon tubing, fluorescent tubes, transformers and ballasts.
3. (Existing Signs Only) If removal of the existing lighting equipment eliminates the disconnect switch, as required by applicable local, state, or country electrical codes; a new disconnect switch must be installed.
4. (Existing Signs Only) Repair and seal any unused openings in the electrical enclosure. Openings greater than 12.7mm (1/2-in) diameter require a metal patch secured by screws or rivets and caulked with non-hardening caulk. Smaller openings may be sealed with non-hardening caulk.
5. (Existing Signs Only) A clean and dry mounting surface ensures optimum adhesion if the self-adhesive method of mounting is chosen. Follow the manufacturer's directions when using a non-oil based solvent, such as rubbing alcohol to clean the surface area where you intend to mount the module. Before installing, ensure the surface is dry.
6. Using the layout guidelines above, determine required number of LED modules required to illuminate the sign.
7. For UL retrofit sign conversions, the following 24VDC Class 2 Power Supplies must be used: GEPS24-25U-NA, GEPS24D-60U-GLX, GELP24-60U-GL, GEPS24-100U-GLX, GEPS24D-100U-NA, GEPS24LT-100U-NA, GEPS24LT-100U-GLX2, GEPS24W-100U-GLX2, USVI-100024FE, USVI-100024FBA, GEPS24-100U-GLX2, GEPS24-100U-TT, GEPS24-200U-GLX2, GEPS24-300U-GLX2. Using the Maximum Loading chart below, determine the number of Power Supplies required to power the number of LED modules required to illuminate the sign, so as not to overload the Power Supply chosen.
8. Follow the instructions above to properly mount the LED modules.
9. Connect the DC output of the power supply to the LED modules using the Electrical Connections instructions above.
10. Connect the power unit to the supply in accordance with the applicable local, state, and country electrical codes, and the instructions found in the power supply installation guide.
11. If required, the disconnect switch shall be installed by qualified personnel, in accordance with applicable local, state, and country electrical codes.

Troubleshooting

Symptom	Solution
All LEDs are OFF	• Check AC input connection and/or check circuit breaker. • Check wire connection(s) at the Tetra® LED System and power supply for improper termination(s) or short circuits. Properly terminate or replace the wire connection(s). • Check that connections are the red striped wire (+) of the LED strip to the red wire (+) of the power supply and the white wire (-) of the LED strip to the black or blue wire (-) of the power supply.
Some LEDs appear dim	• Ensure the overall length of the Tetra® LED System does not exceed the maximum load. • Ensure the length of supply wire is equal to or below the recommended remote mounting distance. • Ensure the overall length of the Tetra® LED System does not exceed the maximum load.
Some of the LEDs are not illuminated	• Check wire connection(s) at the Tetra® LED System and power supply for improper termination(s) or short circuits. Properly terminate or replace the wire connection(s). • Check that connections are the red striped wire (+) of the LED strip to the red wire (+) of the power supply and the white wire (-) of the LED strip to the black or blue wire (-) of the power supply.
Shadows	• Adjust LED layout to ensure uniformity of illumination on the face of the letter.

Maximum Remote Mounting Distance from Driver Output

Power Supply Wattage	18 AWG/0.82 mm^2 Supply Wire	16 AWG/1.31 mm^2 Supply Wire	14 AWG/2.08 mm^2 Supply Wire	12 AWG/3.31 mm^2 Supply Wire
25W	66 ft./20.1 m	-	-	-
60W, 100W, 200W, 300W	5 ft./1.5 m	8 ft./2.4 m	14 ft./4.3 m	22 ft./6.7 m

Parallel Wiring Option

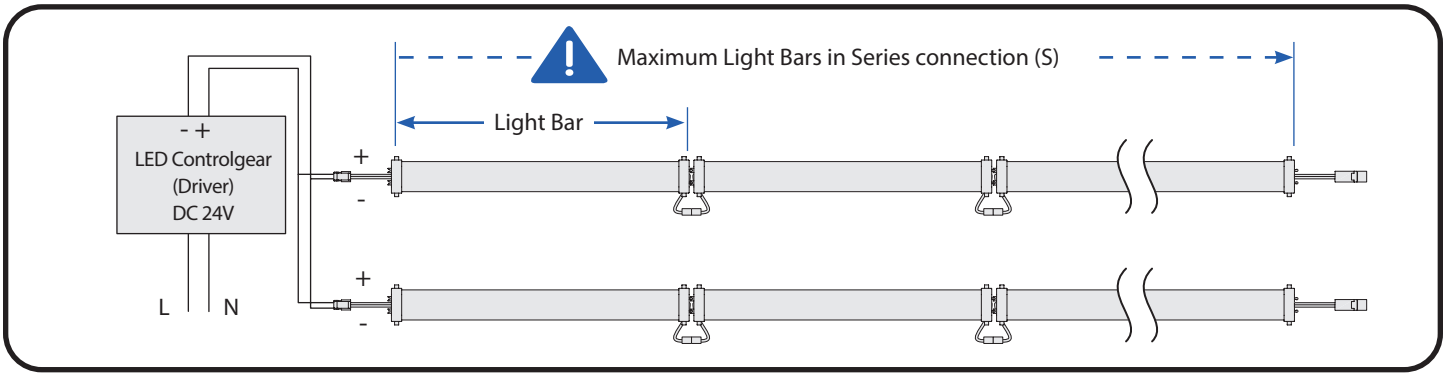

Maximum Loading per 24 VDC Class 2 Power Supply

Power Supply	GELW4871-1, GELW4865-1, GELW4850-1, GELW4841-1, GELW4832-1, GELW4850-1WH	GELW1265-1
Rating (per Light Bar)	24V, 696mA, 16.7W	24V, 175mA, 4.2W
25W Power Supply Load shall not exceed 1.04A	1 bars / 3 ft. 11-3/8 in. (1.20 m)	5 bars / 5 ft. (1.53 m)
60W Power Supply Load shall not exceed 2.5A	3 bars / 11.8438 ft. 10-1/8 in. (3.61 m)*	13 bars / 13 ft. (3.96 m)**
100W Power Supply Load shall not exceed 4.0A	5 bars / 19 ft. 9 in. (6.02 m)†	20 bars / 20 ft. (6.10 m)††
200W Power Supply Load shall not exceed 4.0A per each (of 2) output channels	5 bars / 19 ft. 9 in. (6.02 m) per bank 10 bars / 39 ft. 6 in. (12.04 m) per PS	20 bars / 20 ft. (6.10 m) per bank 40 bars / 40 ft. (12.20 m) per PS
300W Power Supply Load shall not exceed 4A per each (of 3) output channels	5 bars / 19 ft. 9 in. (6.02 m) per bank 15 bars / 59 ft. 3 in. (18.06 m) per PS	20 bars / 20 ft. (6.10 m) per bank 60 bars / 60 ft. (18.30 m) per PS
Maximum Light Bars in Series connection (S)	3 bars / 11 ft. 10-1/8 in. (3.61 m)	11 bars / 11 ft. (3.35 m)

NOTE: In European applications (or other non-UL/CSA applications) drivers other than those mentioned above are available.
Follow the load chart above for equivalent power levels, or refer to the SIGN311 "Driver Application Guide" for other power levels.
*GELP24-60U-GL minimum load = 2 bars / 7 ft. 10-3/4 in. (2.41 m)
**GELP24-60U-GL minimum load = 5 bars / 5 ft. (1.52 m)

If you have any questions about these instructions or your specific application, please contact support at tetra.support@currentlighting.com.
This product is intended solely for sign use only. Not intended for general lighting applications.
The external flexible cable or cord of this luminaire cannot be replaced; if the cord is damaged, the luminaire shall be destroyed.
The light source of this luminaire is not replaceable; when the light source reaches its end of life the whole luminaire shall be replaced.
Acceptable for use in dry and damp locations. The suitability of rain enclosure shall be determined if intended for wet location.
Conforms to the following standards: IP67 (Not inteded for submerged application or where directly exposed to prolonged flowing or dripping water.)

Electrical products must not be thrown out with domestic waste. They must be taken to a communal collecting point for environmentally friendly disposal in accordance with local regulations. Contact your local authorities or stockist for advice on recycling. The packaging material is recyclable. Dispose of the packaging in an environmentally friendly manner and make it available for the recyclable material collection-service.

Current Lighting Solutions, LLC
Cleveland, OH 44124

© 2025 Current Lighting Solutions, LLC. All rights reserved. GE and the GE monogram are trademarks of the General Electric Company and are used under license. Information provided is subject to change without notice. All values are design or typical values when measured under laboratory conditions.