

Tetra® LT

CHANNEL LETTER LIGHTING SYSTEMS

24V performance.
Everyday value.

Tetra® LT — the first economical 24V LED system that meets your essential channel letter needs. Available in three different sizes, these modules deliver incredibly uniform light, allowing you to use fewer modules for faster installation and lower costs per sign. **Tetra® LT** is IP66 and UL wet rated which makes it more robust and reliable even under wet weather. A rated lifetime exceeding 50,000 hours and a standard 5-year warranty ensures that LT stands the test of time.

Powerful OptiLens™ X

Tetra® LT features OptiLens™ X, our patented technology that allows for an incredible 170° viewing angle. This exclusive technology redirects otherwise wasted light to the sign face, making sure your signs shine.

Even More Loading

Load up to 120 feet (36.5 m) or 240 modules of 24V **Tetra® LT Shallow** per 100W power supply using our new and improved GLX2 power supplies.

Full Lineup

Tetra® LT, is offered in three sizes (Deep, Medium and Shallow) and four CCTs (7100K, 6500K, 5000K and 4100K) for complete flexibility.

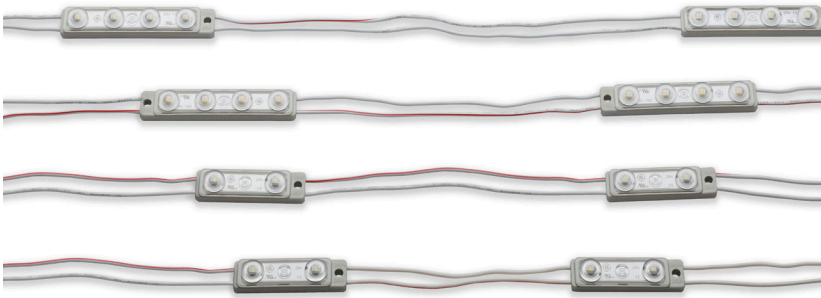



Tetra® LT Features

- Wide 170° beam angle
- Available in three sizes and four CCTs
- Efficacy: up to 167 lm/W
- 24 Volt DC, Class 2 (UL), Class III (IEC)
- UL Wet Rated & IP66
- 5-year limited warranty

Tetra® LT Spacing

	Can Depth	Coverage
LT Shallow	3" (76 mm)	7" (178 mm)
	4"- ≥5" (102 mm - ≥127 mm)	10"-13" (254 mm - 330 mm)
LT Medium	3" (76 mm)	7" (178 mm)
	4"- ≥6" (102 mm - ≥152 mm)	10"-16" (254 mm - 406 mm)
LT Deep	4"-5" (102 mm - 127 mm)	10"-13" (254 mm - 330 mm)
	6"- ≥7" (152 mm - ≥178 mm)	16"-19" (406 mm - 483 mm)

Total Reliability

To ensure every **Tetra® LT** installation will operate brilliantly for years, we perform the most extensive, stringent testing in the industry. We test the LED, water and dust ingress protection, sub-system and complete system at our in-house and independent laboratories around the world. Validation of our designs, components, products and processes include high temperature, high humidity and accelerated life testing.



Mechanical Outline & Viewing Angle

Dimensions in (inches). Metric equivalent mm

GELTD24XX-1

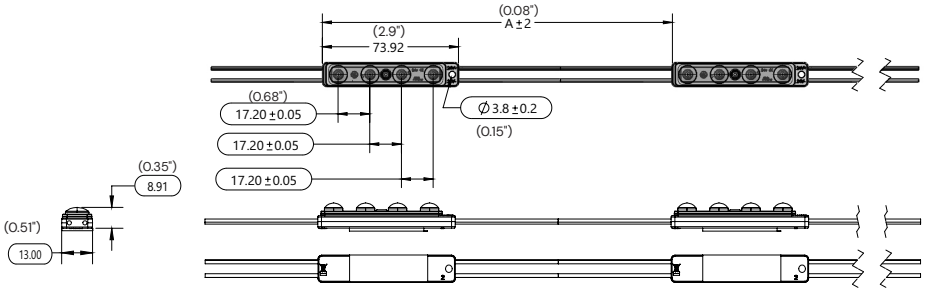

ITEM	A	NOTE
SHALLOW	152	2MOD./FT
MEDIUM	203	1.5MOD./FT
DEEP	218	1.4MOD./FT

GELTM24XX-1
GELTS24XX-1

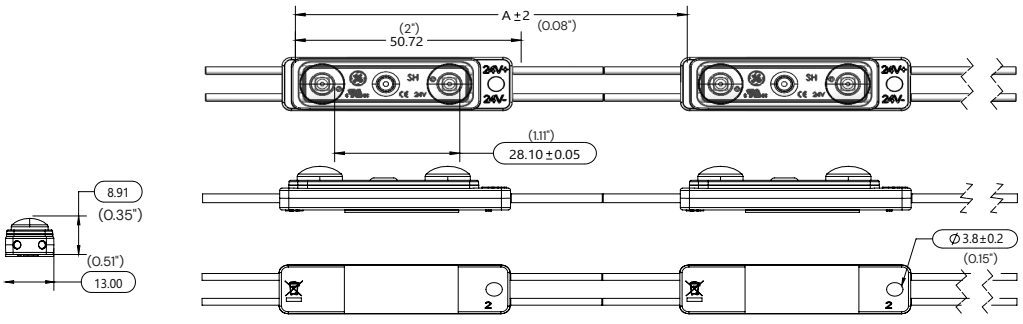

GELTD24XX-1

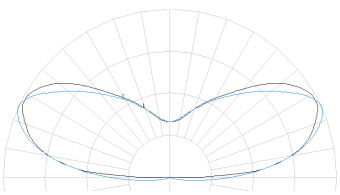

GELTM24XX-1

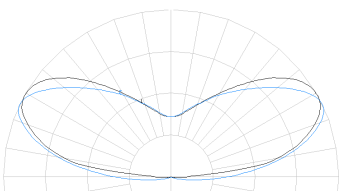

GELTS24XX-1

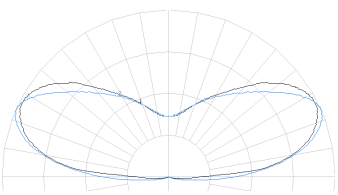

Components

SKU	Order Code	Description	Color	Box Quantity	Strip Quantity
93146577	GELTD2471-1	Tetra®LT Deep 7100K	White	4 strips/box	112 modules per strip
93146578	GELTD2465-1	Tetra®LT Deep 6500K	Warm White	4 strips/box	112 modules per strip
93146579	GELTD2450-1	Tetra®LT Deep 5000K	Warm White	4 strips/box	112 modules per strip
93146580	GELTD2441-1	Tetra®LT Deep 4100K	Warm White	4 strips/box	112 modules per strip
93146573	GELTM2471-1	Tetra®LT Medium 7100K	White	4 strips/box	120 modules per strip
93146574	GELTM2465-1	Tetra®LT Medium 6500K	Warm White	4 strips/box	120 modules per strip
93146575	GELTM2450-1	Tetra®LT Medium 5000K	Warm White	4 strips/box	120 modules per strip
93146576	GELTM2441-1	Tetra®LT Medium 4100K	Warm White	4 strips/box	120 modules per strip
93146559	GELTS2471-1	Tetra®LT Shallow 7100K	White	4 strips/box	160 modules per strip
93146560	GELTS2465-1	Tetra®LT Shallow 6500K	Warm White	4 strips/box	160 modules per strip
93146571	GELTS2450-1	Tetra®LT Shallow 5000K	Warm White	4 strips/box	160 modules per strip
93146572	GELTS2441-1	Tetra®LT Shallow 4100K	Warm White	4 strips/box	160 modules per strip

Technical Specifications

	CCT	Typical Brightness* (Lumens/module)	Typical Brightness* Lumens/ft (Lumens/m)	Modules per Foot	Efficacy/ Module (Lumens/W)	Energy Consumption Rated Module Wattage	Energy Consumption** Typical System Wattage	GLX2 Power Supply Loading (ft/100W)	Viewing Angle
GELTD2471-1	7100K	173	242 (795)	1.4	160	1.08W/module	1.27W/module	57 ft/80 modules	170°
GELTD2465-1	6500K	173	242 (795)	1.4	160	1.08W/module	1.27W/module	57 ft/80 modules	170°
GELTD2450-1	5000K	180	252 (827)	1.4	167	1.08W/module	1.27W/module	57 ft/80 modules	170°
GELTD2441-1	4100K	180	252 (827)	1.4	167	1.08W/module	1.27W/module	57 ft/80 modules	170°
GELTM2471-1	7100K	113	170 (558)	1.5	154	0.72W/module	0.85W/module	80 ft/120 modules	170°
GELTM2465-1	6500K	113	170 (558)	1.5	154	0.72W/module	0.85W/module	80 ft/120 modules	170°
GELTM2450-1	5000K	115	173 (566)	1.5	156	0.72W/module	0.85W/module	80 ft/120 modules	170°
GELTM2441-1	4100K	115	173 (566)	1.5	156	0.72W/module	0.85W/module	80 ft/120 modules	170°
GELTS2471-1	7100K	58	116 (379)	2	161	0.36W/module	0.42W/module	120 ft/240 modules	170°
GELTS2465-1	6500K	58	116 (379)	2	161	0.36W/module	0.42W/module	120 ft/240 modules	170°
GELTS2450-1	5000K	60	120 (394)	2	167	0.36W/module	0.42W/module	120 ft/240 modules	170°
GELTS2441-1	4100K	60	120 (394)	2	167	0.36W/module	0.42W/module	120 ft/240 modules	170°

*Typical performance at 25C +/-10%.

**Typical performance at 25C +/-10% and full driver load.

Additional Specifications

Dimmable	Yes (with dimmable power supply)				
Cutting Resolution	Cut on wire between every module				
Power Supply Voltage	24VDC				
Power Supply Part Numbers	Tetra 24V power supplies				
Maximum Supply Wire Limits		**18 AWG/0.82 mm² Supply Wire**	**16 AWG/1.31 mm² Supply Wire**	**14 AWG/2.08 mm² Supply Wire**	**12 AWG/3.31 mm² Supply Wire**
	25W Power Supply	120 ft./36.6 m	-	-	-
	100W Power Supply	20 ft./6.1 m	25 ft./7.6 m	35 ft./10.6 m	40 ft./12.1 m
	200W Power Supply	20 ft./6.1 m	25 ft./7.6 m	35 ft./10.6 m	40 ft./12.1 m
	300W Power Supply	20 ft./6.1 m	25 ft./7.6 m	35 ft./10.6 m	40 ft./12.1 m
Operating Environment	-40 °C to +60 °C (-40 °F to +140 °F)				
Warranty	Limited system warranty of up to five (5) years				
Module Dimensions (h x l x w) mm (inches)	8.91 x 74 x 13 (0.53 x 2.90 x 0.35) 8.91 x 51 x 13 (0.53 x 2 x 0.35)				
System Certifications	UL Recognized (c-us) #E219167, UL Certified Retrofit Sign Conversion Kit (c-us) #E229508, CE, UKCA, ROHS, IP66 rated: for dry, damp or wet location.				

© 2026 Current Lighting Solutions, LLC. All rights reserved. GE and the GE monogram are trademarks of the General Electric Company and are used under license. Information provided is subject to change without notice. All values are design or typical values when measured under laboratory conditions.