

Tetra® Atom

CHANNEL LETTER LIGHTING SYSTEMS

Our smallest module ever, featuring best-in-class loading and groundbreaking flexibility

Tetra® Atom — the unique 24V LED system designed for channel letters as shallow as 1 inch in depth delivers incredibly uniform light, installs easily and operates efficiently. **Tetra®Atom** also features constant current technology, for even light across the entire run without the need for center tapping.

Powerful OptiLens™ X

Tetra® Atom features OptiLens™ X, our patented technology that allows for a true 165° x 140° viewing angle. This exclusive technology redirects otherwise wasted light to the sign face, making sure your signs shine.

Best-in-class loading

Load 327 **Tetra® Atom** modules per 100W power supply, more than **twice as much** as some competitors' solutions. Half the power supplies means half the material and labor costs: only with Tetra®.

Tetra® for every sign

Designed to meet the evolving needs of sign shops, **Tetra® Atom** delivers bright, uniform light in shallow channel letters, routed acrylic block letters, and halo-lit applications as shallow as 1" deep.



Tetra®Atom Features

- Wide 165° x 140° beam angle
- Efficacy up to 124 lm/W
- 24 Volt DC, Class 2 (UL), Class III (IEC)
- UL Wet Rated & IP66
- 10-year limited warranty

Tetra® Atom Spacing

Can Depth	Coverage	Multiple Strings
1" (25mm)	2" (51mm)	1.5" (38mm)*
1.5" (38mm)	4" (102mm)	2.5" (64mm)
2" (51mm)	6" (152mm)	5" (127mm)
3" (76mm)	7" (178mm)	5" (127mm)

*Face material must be at least 3/16" (5mm) thick

Total Reliability

To ensure every **Tetra® Atom** installation will operate brilliantly for years, we perform the most extensive, stringent testing in the industry. We test the LED, water and dust ingress protection, sub-system and complete system at our in-house and independent laboratories around the world. Validation of our designs, components, products and processes include high temperature, high humidity and accelerated life testing.



Mechanical Outline & Viewing Angle

Dimensions in (inches). Metric equivalent mm

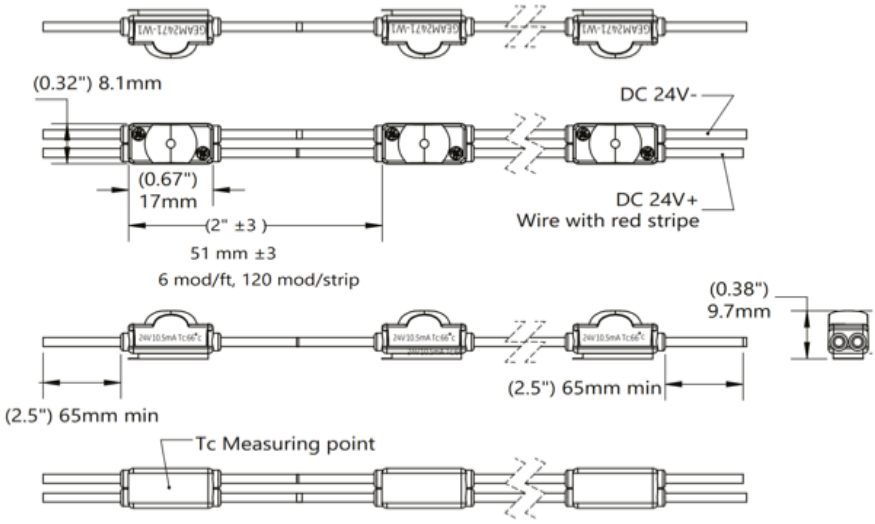

Accessories

SKU	Description	Package quantity
GETMEC1	18 AWG Wire End Caps (0.82 mm²)	100/bag
9409	18 AWG Supply Wire (0.82 mm²)	500 ft (152.40m)/ spool
191600041	22-14 AWG Twist-on Wire Connector (0.33-2.08 mm²)	500/bag
192160004	18-14 AWG In-line Splice Connector (0.82-2.08 mm²)	500/bag

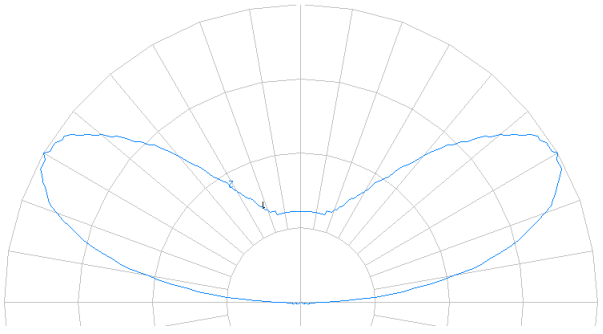

Components

SKU	Model	Details	Color	Pkg. Quantity	Modules per strip
93119588G	GEAM2471-W1	Tetra® Atom 24V 7100K	White	5 Strips/Box	120 modules per strip (20 ft/strip)
93119589G	GEAM2465-W1	Tetra® Atom 24V 6500K	Warm White	5 Strips/Box	120 modules per strip (20 ft/strip)
93119591G	GEAM2450-W1	Tetra® Atom 24V 5000K	Warm White	5 Strips/Box	120 modules per strip (20 ft/strip)
93119592G	GEAM2441-W1	Tetra® Atom 24V 4100K	Warm White	5 Strips/Box	120 modules per strip (20 ft/strip)
93119593G	GEAM2432-W1	Tetra® Atom 24V 3200K	Warm White	5 Strips/Box	120 modules per strip (20 ft/strip)

Technical Specifications

Model	Wavelength/ CCT	Typical Brightness* Lumens/ module	Typical Brightness* Lumens/Ft (Lumens/m)	Energy Consumption* Rated Wattage	Energy Consumption System Wattage	100W GLX Power Supply Loading	100W GLX2/ TT Power Supply Loading	Viewing Angle
GEAM2471-W1	7100K	31	186 (610)	0.25w/module	0.30w/module	50 ft (15.2 m)	50 ft (15.2 m)	165° x 140°
GEAM2465-W1	6500K	31	186 (610)	0.25w/module	0.30w/module	50 ft (15.2 m)	50 ft (15.2 m)	165° x 140°
GEAM2450-W1	5000K	31	186 (610)	0.25w/module	0.30w/module	50 ft (15.2 m)	50 ft (15.2 m)	165° x 140°
GEAM2441-W1	4100K	31	186 (610)	0.25w/module	0.30w/module	50 ft (15.2 m)	50 ft (15.2 m)	165° x 140°
GEAM2432-W1	3200K	31	168 (551)	0.25w/module	0.30w/module	50 ft (15.2 m)	50 ft (15.2 m)	165° x 140°

***Typical performance at 25C +/-10%.**

Additional Specifications

Dimmable	Yes (with dimmable power supply)				
LEDs/Module	1				
LEDs/ft (LEDs/m)	6 (19.7)				
Modules/ ft. (Modules/m)	6 (19.7)				
Cutting Resolution	Cut on wire between every module				
Power Supply	Tetra 24V power supplies				
Maximum Supply Wire Limits		**18 AWG/0.82 mm² Supply Wire**	**16 AWG/1.31 Mm² Supply Wire**	**14 AWG/2.08 mm² Supply Wire**	**12 AWG/3.31 mm² Supply Wire**
	25W Power Supply	120 ft./36.6 m	/	/	/
	100W Power Supply	20 ft./6.1 m	25 ft./7.6 m	35 ft./10.6 m	40 ft./12.1 m
	200W Power Supply	20 ft./6.1 m	25 ft./7.6 m	35 ft./10.6 m	40 ft./12.1 m
	300W Power Supply	20 ft./6.1 m	25 ft./7.6 m	35 ft./10.6 m	40 ft./12.1 m
Operating Environment	-40 °C to +60 °C (-40 °F to +140 °F)				
Module Dimensions (L x W x H)	0.67” x 0.32” x 0.38” (16.9 x 8.1 x 9.7mm)				
Warranty	Limited system warranty of up to ten (10) years				
System Certifications	UL Recognized (C-US) #E219167 for dry, damp or wet locations, UL Classified (C-US) #E229508, CE, UKCA, Class III, ROHS, IP66 rated.				

© 2026 Current Lighting Solutions, LLC. All rights reserved. GE and the GE monogram are trademarks of the General Electric Company and are used under license. Information provided is subject to change without notice. All values are design or typical values when measured under laboratory conditions.