

Tetra® MAX

CHANNEL LETTER LIGHTING SYSTEMS

Good things come in small packages

Our revolutionary **Tetra® MAX** LED signage modules have an all-new look. We've reduced the white module size by 25%, which brings our industry-leading 161 lm/W to a wider range of applications. And thanks to OptiLens™ X, **Tetra® MAX** has an improved viewing angle of 175°, ensuring perfectly uniform sign face illumination. Get more light for less with **Tetra® MAX**.

Powerful OptiLens™ X

Tetra® MAX features **OptiLens™ X**, our patented technology that allows for an incredible 175° viewing angle. This exclusive technology redirects otherwise wasted light to the sign face, making sure your signs shine.

Power Supply Loading

Now load up to 92.6 feet (28.2 m) or 139 modules of 24V **Tetra® MAX** per 100W power supply using our new and improved GLX2 power supplies.

Improved stroke spacing

The new 24V Tetra® MAX stroke spacing has improved on average by 37%, thanks to the new OptiLens™ X wide beam angle.



Tetra®MAX Features

- Wide 175° beam angle
- Efficacy: Up to 161 lm/W for the whites
- 24 Volt DC, UL Wet Rated & IP66
- 10-year limited warranty

Accessories

SKU	Description	Package quantity
GETMEC1	18 AWG Wire End Caps (0.82 mm²)	100/bag
9409	18 AWG Supply Wire (0.82 mm²)	500 ft (152.40m)/ spool
191600041	22-14 AWG Twist-on Wire Connector (0.33-2.08 mm²)	500/bag
192160004	18-14 AWG In-line Splice Connector (0.82-2.08 mm²)	500/bag

Tetra® MAX Spacing

	Can Depth	Coverage
Medium	4-5" (102-127mm)	11-14" (279-356mm)
	5-6" (127-152mm)	14-17" (356-431mm))
Large	≥ 6" (152mm)	17-20" (431-508mm)

Total Reliability

To ensure every **Tetra® MAX** installation will operate brilliantly for years, we perform the most extensive, stringent testing in the industry. We test the LED, water and dust ingress protection, sub-system and complete system at our in-house and independent laboratories around the world. Validation of our designs, components, products and processes include high temperature, high humidity and accelerated life testing.



Mechanical Outline & Viewing Angle

Dimensions in (inches). Metric equivalent mm

Tetra® MAX 24V whites

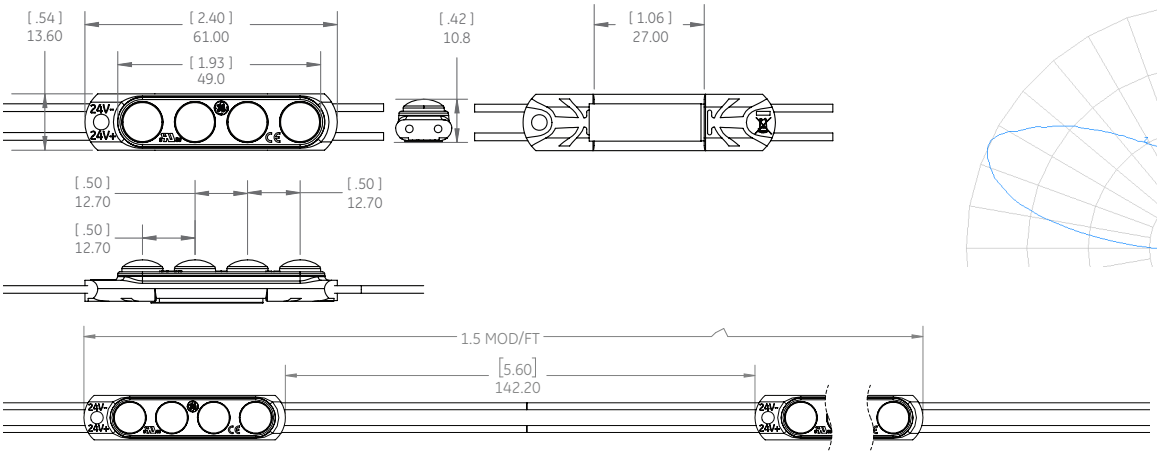

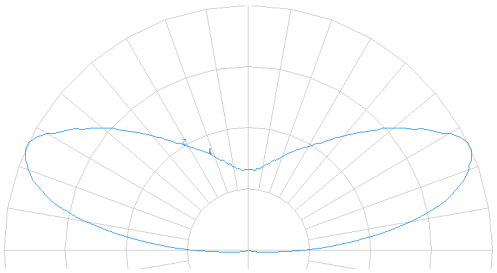

Tetra® MAX 24V colors

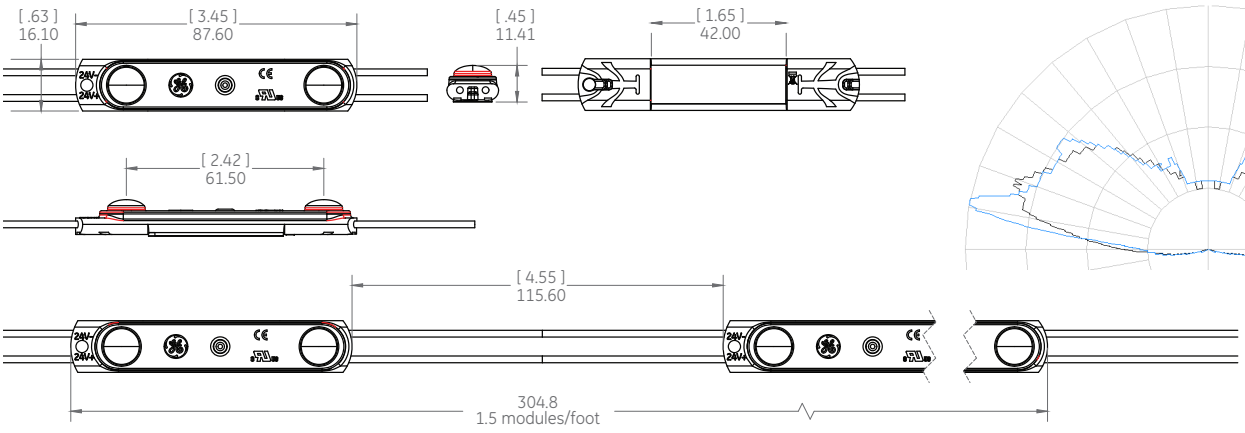

Components

SKU	Model	Details	Color	Order unit	Pkg. Quantity	Modules per strip
93118745G	GEMX2471-W1S	Tetra® MAX 24V 7100K	White	Box	5 Strips/Box	30 modules/strip (20 ft/strip)
93118746G	GEMX2465-W1S	Tetra® MAX 24V 6500K	Warm White	Box	5 Strips/Box	30 modules/strip (20 ft/strip)
93118747G	GEMX2457-W1S	Tetra® MAX 24V 5700K	Warm White	Box	5 Strips/Box	30 modules/strip (20 ft/strip)
93118748G	GEMX2450-W1S	Tetra® MAX 24V 5000K	Warm White	Box	5 Strips/Box	30 modules/strip (20 ft/strip)
93118749G	GEMX2441-W1S	Tetra® MAX 24V 4100K	Warm White	Box	5 Strips/Box	30 modules/strip (20 ft/strip)
93118750G	GEMX2432-W1S	Tetra® MAX 24V 3200K	Warm White	Box	5 Strips/Box	30 modules/strip (20 ft/strip)
93069935G	GEMX24RD-W1	Tetra® MAX colors 24V – 625 nm	Red	Box	5 Strips/Box	30 modules/strip (20 ft/strip)
93070026	GEMXH24RD-W1	Tetra® MAX colors 24V HO – 625 nm	Red	Box	5 Strips/Box	30 modules/strip (20 ft/strip)
93070027G	GEMX24GL-W1	Tetra® MAX colors 24V – 530 nm	Green	Box	5 Strips/Box	30 modules/strip (20 ft/strip)
93070028G	GEMX24BL-W1	Tetra® MAX colors 24V – 470 nm	Blue	Box	5 Strips/Box	30 modules/strip (20 ft/strip)
93070029	GEMX24YG-W1	Tetra® MAX colors 24V – 589 nm	Amber	Box	5 Strips/Box	30 modules/strip (20 ft/strip)

Technical Specifications

Model	Wavelength/ CCT	Typical Brightness* Lumens/ module	Typical Brightness* Lumens/Ft (Lumens/m)	Energy Consumption Rated Wattage	Energy Consumption* System Wattage	100W GLX Power Supply Loading	100W GLX2/ TT Power Supply Loading	Viewing Angle
GEMX2471-W1S	7100K	100	150 (492)	0.62 W/module	0.73 W/module	87 ft (26.5 m)	92.6 ft (28.2 m)	175°
GEMX2465-W1S	6500K	100	150 (492)	0.62 W/module	0.73 W/module	87 ft (26.5 m)	92.6 ft (28.2 m)	175°
GEMX2457-W1S	5700K	100	150 (492)	0.62 W/module	0.73 W/module	87 ft (26.5 m)	92.6 ft (28.2 m)	175°
GEMX2450-W1S	5000K	100	150 (492)	0.62 W/module	0.73 W/module	87 ft (26.5 m)	92.6 ft (28.2 m)	175°
GEMX2441-W1S	4100K	100	150 (492)	0.62 W/module	0.73 W/module	87 ft (26.5 m)	92.6 ft (28.2 m)	175°
GEMX2432-W1S	3200K	90	135 (443)	0.62 W/module	0.73 W/module	87 ft (26.5 m)	92.6 ft (28.2 m)	175°
GEMX24RD-W1	625nm	20	30 (98)	0.46 W/module	0.54 W/module	120 ft (36.5 m)	126.6 ft (38.5 m)	175°
GEMXH24RD-W1	625nm	32	48 (158)	0.74 W/module	0.87 W/module	73 ft (22.3 m)	77.3 ft (23.5 m)	175°
GEMX24GL-W1	530nm	44	66 (217)	0.77 W/module	0.91 W/module	71 ft (21.7 m)	75.3 ft (22.9 m)	175°
GEMX24BL-W1	470nm	15	23 (74)	0.70 W/module	0.82 W/module	79 ft (23.9 m)	82.6 (25.1 m)	175°
GEMX24YG-W1	589nm	14	23 (74)	0.38 W/module	0.45 W/module	140 ft (42.6 m)	150.6 ft (45.9 m)	175°

*Typical performance +/-10%

Additional Specifications

	Whites		Colors		
Dimmable	Yes (with dimmable power supply)		Yes (with dimmable power supply)		
LEDs/Module	4		2		
LEDs/ft (LEDs/m)	6 (19.7)		3 (9.8)		
Modules/ ft. (Modules/m)	1.5 (4.9)		1.5 (4.9)		
Module Dimensions (h x l x w)	0.41 in x 2.4 in x 0.54 in (10.46 mm x 61 mm x 13.6 mm)		0.45 in x 3.45 in x 0.63 in (11.41 mm x 87.6 mm x 16.1 mm)		
Cutting Resolution	Cut on wire between every module				
Power Supply	Tetra 24V power supplies				
Maximum Supply Wire Limits		**18 AWG/0.82 mm² Supply Wire**	**16 AWG/1.31 mm² Supply Wire**	**14 AWG/2.08 mm² Supply Wire**	**12 AWG/3.31 mm² Supply Wire**
	25W Power Supply	120 ft./36.6 m	/	/	/
	100W Power Supply	20 ft./6.1 m	25 ft./7.6 m	35 ft./10.6 m	40 ft./12.1 m
	200W Power Supply	20 ft./6.1 m	25 ft./7.6 m	35 ft./10.6 m	40 ft./12.1 m
	300W Power Supply	20 ft./6.1 m	25 ft./7.6 m	35 ft./10.6 m	40 ft./12.1 m
Operating Environment	-40 °C to +60 °C (-40 °F to +140 °F)				
Warranty	Limited system warranty of up to ten (10) years				
System Certifications	UL Recognized (C-US) #E219167, UL Classified (C-US) #E229508, CE, UKCA, ROHS • IP66 rated: for dry, damp or wet location.				

© 2024 Current Lighting Solutions, LLC. All rights reserved. GE and the GE monogram are trademarks of the General Electric Company and are used under license. Information provided is subject to change without notice. All values are design or typical values when measured under laboratory conditions.

(Rev 08/24/26)
SIGN254_R01