Stick

Fluorescent Box Sign Retrofit LED Lighting System

24 Volt

(GETSaabbcccdde)*

*key	
aa	PM = PowerMax or PH = PowerMax High Output
bb	SS = Single Sided or DS = Double Sided
ccc	018 = 18″; 024 = 24″; 030 = 30″; 036 = 36″; 042 = 42″; 048 = 48″; 060 = 60″; 064 = 64″; 072 = 72″; 084 = 84″; 096 = 96″; 108 = 108″; 117 = 117″; 120 = 120″
dd	71 = 7100K CCT; 57 = 5700K CCT
e	A=3′ Whip Length or B=6′ Whip Length



STOP BEFORE YOU BEGIN

Read these instructions completely and carefully.

⚠ WARNING / AVERTISSEMENT

RISK OF ELECTRIC SHOCK
- Turn power off before inspection, installation or removal.
- Properly ground power supply enclosure.

RISK OF FIRE
- Use only UL approved wire for input/output connections. Minimum size 18 AWG (0.82mm²)
- Follow all NEC and local codes.
- Not to be submerged or used in a marine environment.

RISK OF FIRE OR ELECTRIC SHOCK
- LED Retrofit Kit installation requires knowledge of sign electrical systems. If not qualified, do not attempt installation. Contact a qualified electrician.
- Install this kit only in host signs that have been identified in the installation instructions and where the input rating of the retrofit kit does not exceed the input rating of the sign.
- Installation of this LED retrofit kit may involve drilling or punching of holes into the structure of the sign. Check for enclosed wiring and components to avoid damage to wiring and electrical parts.
- Do not make or alter any open holes in an enclosure of wiring or electrical components during kit installation.

RISQUES DE DÉCHARGES ÉLECTRIQUES
- Coupez l'alimentation avant l'inspection, l'installation ou le déplacement.
- Assurez-vous de correctement mettre à terre l'alimentation électrique.

RISQUES D'INCENDIE
- N'utilisez que des fils approuvés par UL pour les entrées/sorties de connexion. Taille minimum 18 AWG (0.82mm²)
- Respectez tous les codes NEC et codes locaux.
- Ne pas submerger ou installer dans un environnement marin.

RISQUE D'INCENDIE OU DE CHOC ÉLECTRIQUE
- L'installation de l'équipement de remplacement DEL exige la connaissance des systèmes électriques pour enseignes. Si non qualifié, ne tentez pas d'installation. Veuillez contacter un électricien qualifié.
- Risque d'incendie ou de choc Électrique. Installez cet ensemble seulement dans des enseignes hôtes qui ont été identifiés dans les instructions d'installation et dont la capacité d'entrée de l'ensemble ne dépasse pas la capacité d'entrée de l'enseigne.
- L'installation de cet équipement de remplacement DEL peut impliquer le perçage ou le poinçonnage de trous dans la structure du panneau Vérifiez le câblage et les composants inclus pour éviter d'endommager le câblage et les composants électriques.
- Ne pas faire ou modifier les trous ouverts dans une enceinte de câblage ou de composants électriques pendant l'installation de cet équipement de remplacement DEL.

Prepare Electrical Wiring



Electrical Requirements
- Limited to use in dry and damp locations.
- The grounding and bonding of the LED Driver shall be done in accordance with National Electric Code (NEC) Article 600.
- Follow all National Electric Codes (NEC) and local codes.
- These products are only suitable for connection to a circuit from a Class 2 power source.
- These products have not been evaluated for use when connected to a power source that does not comply with Class 2 voltage and energy limited supplies.

Save These Instructions

Use only in the manner intended by the manufacturer. If you have any questions, contact the manufacturer.

UL CERTIFIED
SAFETY US-CA
SÉCURITÉ US-CA
E229508

RETROFIT SIGN CONVERSION LED KIT FOR USE ONLY IN ACCORDANCE WITH KIT INSTRUCTIONS.

KIT IS COMPLETE ONLY WHEN ALL PARTS REQUIRED BY THE INSTRUCTIONS ARE PRESENT.

TROUSSE DE CONVERSION À DEL POUR LA MODERNISATION DES ENSEIGNES

À UTILISER CONFORMÉMENT AU GUIDE D'INSTALLATION.

Components

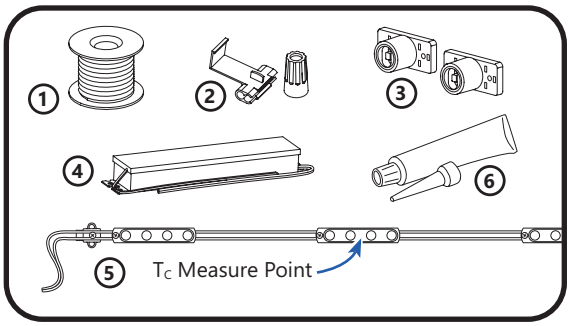

1. UL certified 18 AWG (0.82 mm²) supply wire
2. UL certified 22-14 AWG (0.33-2.08 mm²) wire connectors or 22-18 AWG (0.33-0.82 mm²) inline/IDC connectors
3. 93020091 LFL-LED Sockets LineFit Light Sockets (optional)
4. 24 Volt Power Supply
5. Tetra® Stick
6. Electrical grade RTV silicone. Examples below:
   - Momentive RTV 6700 Series Silicone Rubber Adhesive Sealant
   - Momentive White Blanc RTV 162 Silicone Rubber Adhesive Sealant-Electrical Grade
   - Dow Corning 3140 - Non-Corrosive Flowable (clear)
   - Dow Corning 3145 - Non-Corrosive Nonflowable (clear or gray)
   - Dow Corning RTV 748 Non-Corrosive Sealant-White

Installation

Prior to installation, survey the site for information regarding power and accessibility inside and outside the building. Ensure that the branch circuit supplying the existing transformer or ballast will be within the voltage ratings of the new LED power supply, and have a current rating not exceeding 20A, or that permitted by applicable local, state, or country electrical codes (whichever is less).

If removal of the existing lighting equipment (see Step 2) eliminates the disconnect switch, as required by applicable local, state, or country electrical codes; a new disconnect switch must be installed.

If required, the disconnect switch shall be installed by qualified personnel, in accordance with applicable local, state, and country electrical codes.

Repair and seal any unused openings in the electrical enclosure. Openings greater than 12.7-mm (1/2-in) diameter require a metal patch secured by screws or rivets and caulked with non-hardening caulk. Smaller openings may be sealed with non-hardening caulk.

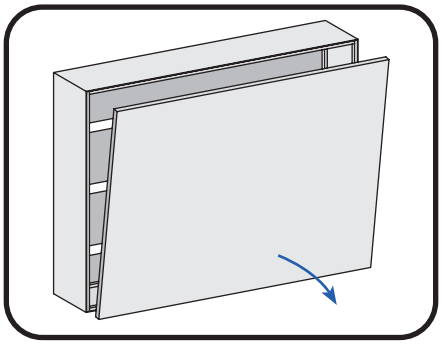

1. Turn off power and remove panel from fluorescent box sign.

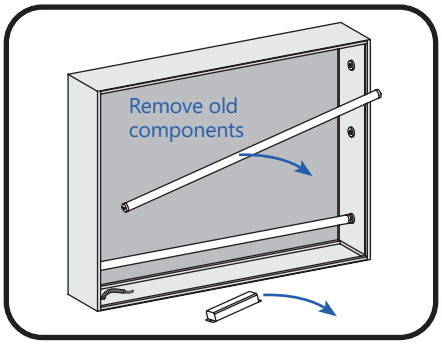

2. Remove old fluorescent tubes, ballast and wiring. DO NOT remove existing fluorescent lamp holders. Inspect existing sockets and replace as needed. De-energize the lamp holders.

   NOTE: *Follow all federal and local regulations when disposing of neon tubing, fluorescent tubes, transformers and ballasts.*

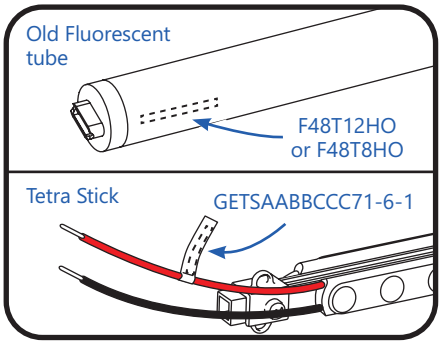

3. Read the product labels to determine Tetra Stick length required to span width of sign based on table in the ***Specifications*** section (pages 4-5).

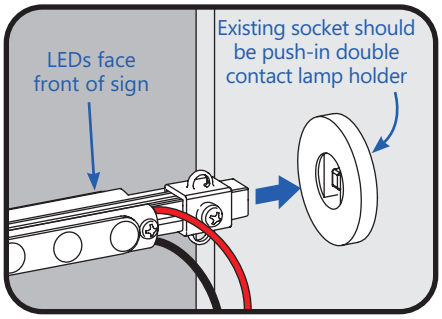

4. Orient Tetra Stick so LEDs are facing front of sign.

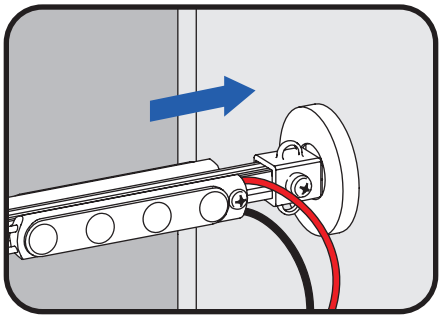

5. Push Tetra Stick into existing fluorescent lamp holders.

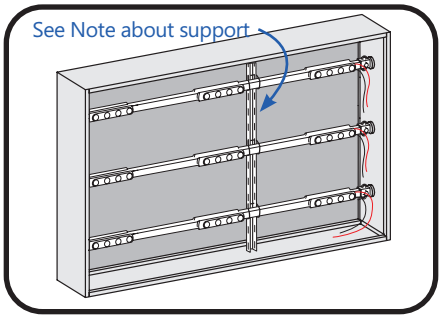

6. Continue installing Tetra Stick fixtures.

   NOTE: *For horizontal installations greater than 6ft in length, the Tetra Stick(s) should be centrally supported.*

Electrical Connections

Single Tetra Stick Installation

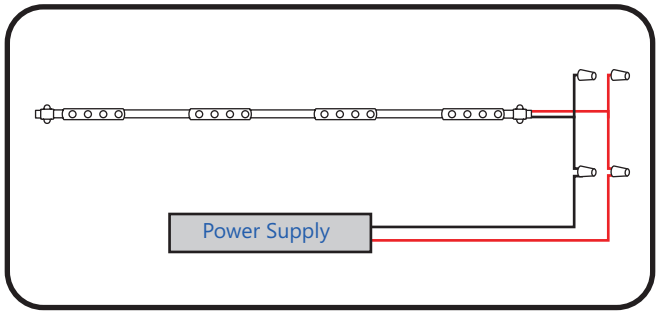

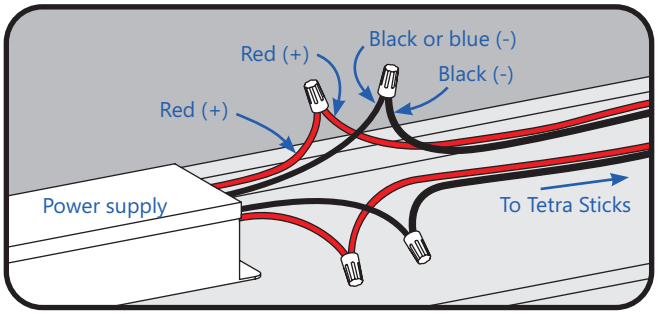

1. Connect the red wire (+) of the Tetra Stick to the red wire (+) of the power supply. Connect the black wire (-) of the Tetra Stick to the black or blue wire (-) of the power supply. Seal all connections that could be exposed to water with electrical grade RTV silicone

Multiple Tetra Stick Installation

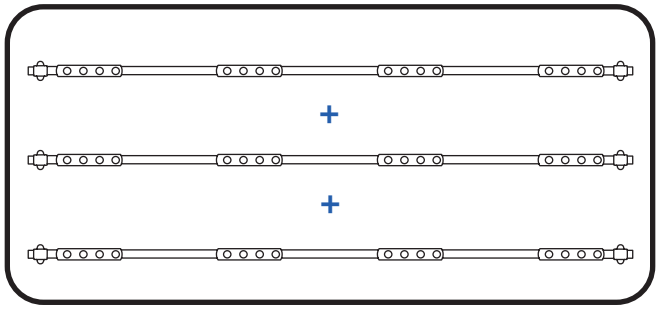

1. Add up total number of Tetra Sticks to determine the appropriate number of 24VDC Class 2 Tetra LED drivers to use based on the ***Specifications Charts for Tetra Stick chosen*** (see pages 4-5).

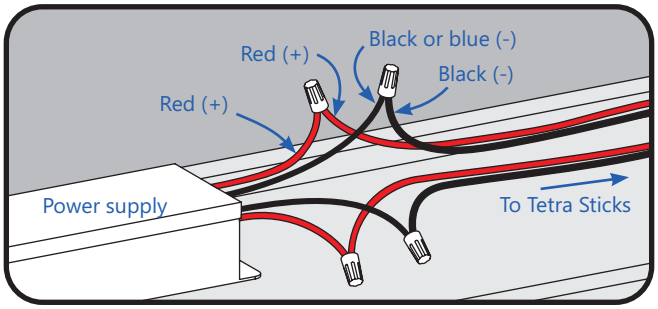

2. Connect the red wire (+) of the Tetra Stick to the red wire (+) of the power supply. Connect the black wire (-) of the Tetra Stick to the black or blue wire (-) of the power supply.

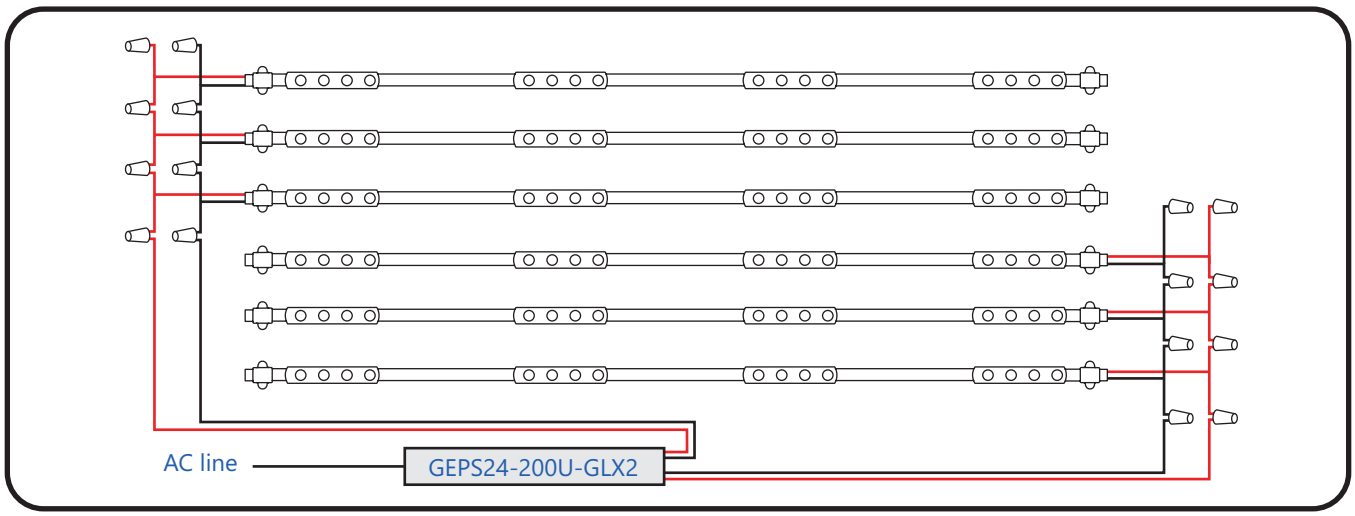

3. Connect Tetra Stick using twist-on wire connectors or in-line (IDC) connectors. Join black wires together and red wires together. Seal all connections that could be exposed to water with electrical grade RTV silicone.

NOTE: Make sure not to exceed LED driver power limits (see Step 1). Drawing above is for reference only; your lighting layout may differ.

NOTE: All drivers except GEPS24-200U-GLX2 and GEPS24-300U-GLX2 must be enclosed or provided with a GEPSJB60 LED driver extended enclosure.

NOTE: Refer to Power Supply Installation Guide for AC driver installation.

Specifications – Single Sided PowerMAX

T-12 Length (in)	Actual Length (in)	Watts per Stick	Sticks per Power Supply - Total (per Bank)							Part Number
			60W	80W	100W GLX/UVSI/NA	100W GLX2/TT	200W GLX2	300W GL	300W GLX2	
18	15.91	1.70	28	38	47	51	102(51)	141(47)	153(51)	GETSPMSS18**#1
24	21.91	2.50	19	26	32	34	68(34)	96(32)	102(34)	GETSPMSS24**#1
30	27.91	2.50	19	26	32	34	68(34)	96(32)	102(34)	GETSPMSS30**#1
36	33.91	3.40	14	19	24	25	50(25)	72(24)	75(25)	GETSPMSS36**#1
42	39.91	4.20	12	15	19	20	40(20)	57(19)	60(20)	GETSPMSS42**#1
48	45.91	5.00	10	13	16	17	34(17)	48(16)	51(17)	GETSPMSS48**#1
60	57.91	5.90	8	11	14	14	28(14)	42(14)	42(14)	GETSPMSS60**#1
64	61.91	6.70	7	10	12	12	24(12)	36(12)	36(12)	GETSPMSS64**#1
72	69.91	7.60	6	8	11	11	22(11)	33(11)	33(11)	GETSPMSS72**#1
84	81.91	8.40	6	8	10	10	20(10)	30(10)	30(10)	GETSPMSS84**#1
96	93.91	10.10	5	6	8	8	16(8)	24(8)	24(8)	GETSPMSS96**#1
108	105.91	10.90	4	6	7	7	14(7)	21(7)	21(7)	GETSPMSS108**#1
117	114.91	11.80	4	5	7	7	14(7)	21(7)	21(7)	GETSPMSS117**#1
120	117.91	12.60	4	5	6	6	12(6)	18(6)	18(6)	GETSPMSS120**#1

**71 = 7100K CCT; 57 = 5700K CCT
A = 3 foot whip; B = 6 foot whip

Specifications – Double Sided PowerMAX

T-12 Length (in)	Actual Length (in)	Watts per Stick	Sticks per Power Supply - Total (per Bank)							Part Number
			60W	80W	100W GLX/UVSI/NA	100W GLX2/TT	200W GLX2	300W GL	300W GLX2	
18	15.91	3.40	14	19	24	25	50(25)	72(24)	75(25)	GETSPMDS18**#1
24	21.91	5.00	10	13	16	17	34(17)	48(16)	51(17)	GETSPMDS24**#1
30	27.91	5.00	10	13	16	17	34(17)	48(16)	51(17)	GETSPMDS30**#1
36	33.91	6.80	7	9	12	12	2(12)	36(12)	36(12)	GETSPMDS36**#1
42	39.91	8.40	6	8	10	10	20(10)	30(10)	30(10)	GETSPMDS42**#1
48	45.91	10.00	5	6	8	8	16(8)	24(8)	24(8)	GETSPMDS48**#1
60	57.91	11.80	4	5	7	7	14(7)	21(7)	21(7)	GETSPMDS60**#1
64	61.91	13.40	4	5	6	6	12(6)	18(6)	18(6)	GETSPMDS64**#1
72	69.91	15.20	3	4	5	5	10(5)	15(5)	15(5)	GETSPMDS72**#1
84	81.91	16.80	3	4	5	5	10(5)	15(5)	15(5)	GETSPMDS84**#1
96	93.91	20.20	2	3	4	4	8(4)	12(4)	12(4)	GETSPMDS96**#1
108	105.91	21.80	2	3	3	3	6(3)	9(3)	9(3)	GETSPMDS108**#1
117	114.91	23.60	2	2	3	3	6(3)	9(3)	9(3)	GETSPMDS117**#1
120	117.91	25.20	2	2	3	3	6(3)	9(3)	9(3)	GETSPMDS120**#1

**71 = 7100K CCT; 57 = 5700K CCT
A = 3 foot whip; B = 6 foot whip

Specifications – Single Sided PowerMAX HO

T-12 Length (in)	Actual Length (in)	Watts per Stick	Sticks per Power Supply - Total (per Bank)						Part Number
			60W	80W	100W GLX/UVSI/NA	100W GLX2/TT	200W GLX2	300W GL	300W GLX2	
18	15.91	2.40	20	26	33	36	72(36)	99(33)	108(36)	GETSPHSS18**#1
24	21.91	3.60	13	17	22	24	48(24)	66(22)	72(24)	GETSPHSS24**#1
30	27.91	3.60	13	17	22	24	48(24)	66(22)	72(24)	GETSPHSS30**#1
36	33.91	4.80	10	13	16	18	36(18)	48(16)	54(18)	GETSPHSS36**#1
42	39.91	6.00	8	10	13	14	28(14)	39(13)	42(14)	GETSPHSS42**#1
48	45.91	7.20	7	9	11	12	24(12)	33(11)	36(12)	GETSPHSS48**#1
60	57.91	8.40	6	7	9	10	20(10)	27(9)	30(10)	GETSPHSS60**#1
64	61.91	9.60	5	7	8	9	18(9)	24(8)	27(9)	GETSPHSS64**#1
72	69.91	10.80	4	6	7	8	16(8)	21(7)	24(8)	GETSPHSS72**#1
84	81.91	12.00	4	5	7	7	14(7)	21(7)	21(7)	GETSPHSS84**#1
96	93.91	14.40	3	4	6	6	12(6)	18(6)	18(6)	GETSPHSS96**#1
108	105.91	15.60	3	4	5	5	10(5)	15(5)	15(5)	GETSPHSS108**#1
117	114.91	16.80	3	4	5	5	10(5)	15(5)	15(5)	GETSPHSS117**#1
120	117.91	18.00	3	3	4	4	8(4)	12(4)	12(4)	GETSPMSS120**#1

**71 = 7100K CCT; 57 = 5700K CCT
A = 3 foot whip; B = 6 foot whip

Specifications – Double Sided PowerMAX HO

T-12 Length (in)	Actual Length (in)	Watts per Stick	Sticks per Power Supply - Total (per Bank)						Part Number
			60W	80W	100W GLX/UVSI/NA	100W GLX2/TT	200W GLX2	300W GL	300W GLX2	
18	15.91	4.80	10	13	16	18	36(18)	48(16)	54(18)	GETSPHDS18**#1
24	21.91	7.20	7	9	11	12	24(12)	33(11)	36(12)	GETSPHDS24**#1
30	27.91	7.20	7	9	11	12	24(12)	33(11)	36(12)	GETSPHDS30**#1
36	33.91	9.60	5	7	8	9	18(9)	24(8)	27(9)	GETSPHDS36**#1
42	39.91	12.00	4	5	7	7	14(7)	21(7)	21(7)	GETSPHDS42**#1
48	45.91	14.40	3	4	5	6	12(6)	15(5)	18(6)	GETSPHDS48**#1
60	57.91	16.80	3	4	5	5	10(5)	15(5)	15(5)	GETSPHDS60**#1
64	61.91	19.20	2	3	4	4	8(4)	12(4)	12(4)	GETSPHDS64**#1
72	69.91	21.60	2	3	4	4	8(4)	12(4)	12(4)	GETSPHDS72**#1
84	81.91	24.00	2	2	3	3	6(3)	9(3)	9(3)	GETSPHDS84**#1
96	93.91	28.80	2	2	3	3	6(3)	9(3)	9(3)	GETSPHDS96**#1
108	105.91	31.20	2	2	2	2	4(2)	6(2)	6(2)	GETSPHDS108**#1
117	114.91	33.60	1	2	2	2	4(2)	6(2)	6(2)	GETSPHDS117**#1
120	117.91	36.00	1	1	2	2	4(2)	6(2)	6(2)	GETSPMDS120**#1

**71 = 7100K CCT; 57 = 5700K CCT
A = 3 foot whip; B = 6 foot whip

Power Supply Specifications

Wattage	Power Supply	Long Description
60W	GELP24-60U-GL	Power Supply (24VDC / 60W), Input Voltage: 108-305VAC; Damp Rated; Remote or Raceway; 1 Output Bank; Class 2
	GEPS24D-60U-GLX	0-10V Dimming Power Supply (24VDC/60W), Input Voltage: 108-305VAC; Damp Rated; Remote or Raceway; 1 Output Bank; Class 2
80W	GEPS24W-80	Power Supply (24VDC/80W), Input Voltage: 90-264VAC; Wet Location Rated; 1 Output Bank; Class 2
100W	GEPS24-100U-GLX USVI-100024FE	Power Supply (24VDC / 96W), Input Voltage: 108-305VAC; Damp Rated; Remote or Raceway; 1 Output Bank; Class 2
	GEPS24D-100U-NA	0-10V Dimming Power Supply (24VDC/100W), Input Voltage: 108-305VAC; Damp Rated; Remote or Raceway; 1 Output Bank; Class 2
	GEPS24-100U-GLX2/TT	Power Supply (24VDC/100W), Input Voltage: 108-305VAC; Damp Rated; Remote or Raceway; 1 Output Bank; Class 2
200W	GEPS24-200U-GLX2	Power Supply (24VDC/200W), Input Voltage: 108-305VAC; Damp Rated; Integrated junction box, Remote or Raceway; 2 Output Banks of 100W each; Class 2
300W	GEPS24-300U-GLX2	Power Supply (24VDC/300W), Input Voltage:108-305VAC; Damp Rated; Integrated junction box, Remote or Raceway; 3 Output Banks of 100W each; Class 2

Troubleshooting

Symptom	Solution
Row of fixtures does not light	• Check wire connections to power supply to ensure red stripe-to-red and white-to-black connections. • Check row-to-row polarity connections.
Sign does not light	• Check input and output voltage and check power supply input/output connections. • Check polarity connections.
Individual fixture does not light	• Remove fixture and replace with another working fixture.

This device complies with part 15 of the FCC Rules. Operation is subject to the following two conditions: (1) This device may not cause harmful interference, and (2) this device must accept any interference received, including interference that may cause undesired operation.

Note: This equipment has been tested and found to comply with the limits for a Class A digital device, pursuant to part 15 of the FCC Rules. These limits are designed to provide reasonable protection against harmful interference when the equipment is operated in a commercial environment. This equipment generates, uses, and can radiate radio frequency energy and, if not installed and used in accordance with the instruction manual, may cause harmful interference to radio communications. Operation of this equipment in a residential area is likely to cause harmful interference in which case the user will be required to correct the interference at his own expense.

This Class [A] RFLD complies with the Canadian standard ICES-005. Ce DEFR de la classe [A] est conforme à la NMB-005 du Canada.

Any changes or modifications not expressly approved by the party responsible for compliance could void the user's authority to operate this equipment.

This product is intended solely for the use of non-residential signage lighting and is not intended for use in any other applications.
Conforms to the following standards:

Current Lighting Solutions, LLC
Beachwood, OH 44122

© 2023 Current Lighting Solutions, LLC. All rights reserved. GE and the GE monogram are trademarks of the General Electric Company and are used under license. Information provided is subject to change without notice. All values are design or typical values when measured under laboratory conditions.