MAX
LED Lighting System

24 Volt



GEMX24RD-W1, GEMXH24RD-W1, GEMX24GL-W1, GEMX24BL-W1, GEMX24YG-W1

STOP BEFORE YOU BEGIN

Read these instructions completely and carefully.

BG Българската версия на инструкциите за инсталаця и информация за безопасност могат да бъдат намерени на следния адрес: https://www.led.com/eu-en

CS Návod k montáži a bezpečnostní informace v češtině najdete zde: https://www.led.com/eu-en

DA Den danske version af installationsvejledningen og sikkerhedsoplysninger kan findes på følgende placering: https://www.led.com/eu-en

DE Die deutsche Version der Installationsanleitung und Sicherheitsinformationen finden Sie in folgendem Verzeic: https://www.led.com/eu-en

EL Μπορείτε να βρείτε την ελληνική εκδχή των οδηγιών νγκατάστασης και των πληροφοριών ασφάλειας στην εξής τοποθεσία: https://www.led.com/eu-en

ES La versión española de las instrucciones de instalación y la información sobre seguridad puede encontrarse en la siguiente ubicación: https://www.led.com/eu-en

ET Eestikeelse paigaldusjuhendi ja ohutusnñuded leiate aadressilt: https://www.led.com/eu-en

FI Asennusohjeiden ja turvallisuustietojen suomenkielinen versio löytyy seuraavasta paikasta: https://www.led.com/eu-en

FR La version française des instructions d'installations et information de sécurité est disponible à l'adresse suivante: https://www.led.com/eu-en

HR Hrvatska verzija priručnika za ugradnju i sigurnosnih informacija nalazi se na sljedečoj lokaciji: https://www.led.com/eu-en

HU A telepítési útmutató és a biztnosági információk magyar nyelvű változata az alábbi címen található: https://www.led.com/eu-en

IT La versione italiana del manuale di installazione e sicurezza può essere reperita nella seguente sezione: https://www.led.com/eu-en

LT Lietuvišką diegimo instrukcijos ir saugos informacijos versiją galima rasti šioje vietoje: https://www.led.com/eu-en

LV Uzstādīšanas instrukciju un drošības informāciju latviešu valodā var atrast šeit: https://www.led.com/eu-en

NL De Nederlandse versie van de installatie-instructies en veiligheidsinformatie kan op de volgende locatie worden gevonden: https://www.led.com/eu-en

PL Polską wersję instrukcji instalacji oraz informacje dotyczące bezpieczeństwa można znaleźć w następującej lokalizacji: https://www.led.com/eu-en

PT A versão em Português das instruções de instalação e das informações de segurança pode ser encontrada na seguinte localização: https://www.led.com/eu-en

RO Versiunea în limba română a instrucţiunilor de instalare şi a informaţiilor de siguranţă pot fi găsite la: https://www.led.com/eu-en

SV Ni hittar den svenska versionen av installationsanvisningarna och säkerhetsinformationen på följande plats: https://www.led.com/eu-en

SL Previdnostna opozorila in varnostne informacije so na zadnji strani vodnika za namestitev. Pred začetkom namestitve izdelka jih skrbno preberite: https://www.led.com/eu-en

SK Slovenskú verziu montažnej príručky a bezpečnostných instrukcií nájdete na nasledujúcej lokalite: https://www.led.com/eu-en

For the latest North American install guides for your product go to: https://www.led.com
For the latest European install guides for your product go to: https://www.led.com/eu-en

Prepare Electrical Wiring FOR UL ONLY

Electrical Requirements

- Acceptable for use in dry, damp and wet locations.
- The grounding and bonding of the LED Driver shall be done in accordance with National Electric Code (NEC) Article 600.
- Follow all National Electric Codes (NEC) and local codes.
- These products are only suitable for connection to a circuit from a Class 2 power source.
- These products have not been evaluated for use when connected to a power source that does not comply with Class 2 voltage and energy limited supplies.

Save These Instructions

Use only in the manner intended by the manufacturer. If you have any questions, contact the manufacturer.

UL CERTIFIED
SAFETY US•CA
SÉCURITÉ US•CA
E229508

RETROFIT SIGN CONVERSION LED KIT FOR USE ONLY IN ACCORDANCE WITH KIT INSTRUCTIONS.
KIT IS COMPLETE ONLY WHEN ALL PARTS REQUIRED BY THE INSTRUCTIONS ARE PRESENT.
TROUSSE DE CONVERSION À DEL POUR LA MODERNISATION DES ENSEIGNES
À UTILISER CONFORMÉMENT AU GUIDE D'INSTALLATION.

© 2025 Current Lighting Solutions, LLC. All rights reserved. GE and the GE monogram are trademarks of the General Electric Company and are used under license. Information provided is subject to change without notice. All values are design or typical values when measured under laboratory conditions.

⚠ WARNING / AVERTISSEMENT

RISK OF ELECTRIC SHOCK

- Turn power off before inspection, installation or removal.
- Properly ground power supply enclosure.

RISK OF FIRE

- Use only suitably approved wire for input/output connections. Minimum size 18 AWG (0.82mm^2)
- Follow all local codes.
- Not to be submerged or used in a marine environment.

RISQUES DE DÉCHARGES ÉLECTRIQUES

- Coupez l'alimentation avant l'inspection, l'installation ou le déplacement.
- Assurez-vous de correctement mettre à terre l'alimentation électrique.

RISQUES D'INCENDIE

- N'utilisez que des fils approuvés par UL pour les entrées/sorties de connexion. Taille minimum 18 AWG (0.82mm^2)
- Respectez tous les codes locaux.
- Ne pas submerger ou installer dans un environnement marin.

⚠ UL WARNING / AVERTISSEMENT UL

RISK OF FIRE OR ELECTRIC SHOCK

- LED Retrofit Kit installation requires knowledge of sign electrical systems. If not qualified, do not attempt installation. Contact a qualified electrician.
- Install this kit only in host signs that have been identified in the installation instructions and where the input rating of the retrofit kit does not exceed the input rating of the sign.
- Installation of this LED retrofit kit may involve drilling or punching of holes into the structure of the sign. Check for enclosed wiring and components to avoid damage to wiring and electrical parts.
- Do not make or alter any open holes in an enclosure of wiring or electrical components during kit installation.

RISQUE D'INCENDIE OU DE CHOC ÉLECTRIQUE

- L'installation de l'équipement de remplacement DEL exige la connaissance des systèmes électriques pour enseignes. Si non qualifié, ne tentez pas d'installation. Veuillez contacter un électricien qualifié.
- Risque d'incendie ou de choc électrique. Installez cet ensemble seulement dans des enseignes hôtes qui ont été identifiés dans les instructions d'installation et dont la capacité d'entrée de l'ensemble ne dépasse pas la capacité d'entrée de l'enseigne.
- L'installation de cet équipement de remplacement DEL peut impliquer le perçage ou le poinçonnage de trous dans la structure du panneau Vérifiez le câblage et les composants inclus pour éviter d'endommager le câblage et les composants électriques.
- Ne pas faire ou modifier les trous ouverts dans une enceinte de câblage ou de composants électriques pendant l'installation de cet équipement de remplacement DEL.

This device complies with part 15 of the FCC Rules. Operation is subject to the following two conditions: (1) This device may not cause harmful interference, and (2) this device must accept any interference received, including interference that may cause undesired operation.

NOTE: This equipment has been tested and found to comply with the limits for a Class A digital device, pursuant to part 15 of the FCC Rules. These limits are designed to provide reasonable protection against harmful interference when the equipment is operated in a commercial environment. This equipment generates, uses, and can radiate radio frequency energy and, if not installed and used in accordance with the instruction manual, may cause harmful interference to radio communications. Operation of this equipment in a residential area is likely to cause harmful interference in which case the user will be required to correct the interference at his own expense.

This Class [A] RFLD complies with the Canadian standard ICES-005. Ce DEFR de la classe [A] est conforme à la NMB-005 du Canada.

Any changes or modifications not expressly approved by the party responsible for compliance could void the user's authority to operate this equipment.

Components

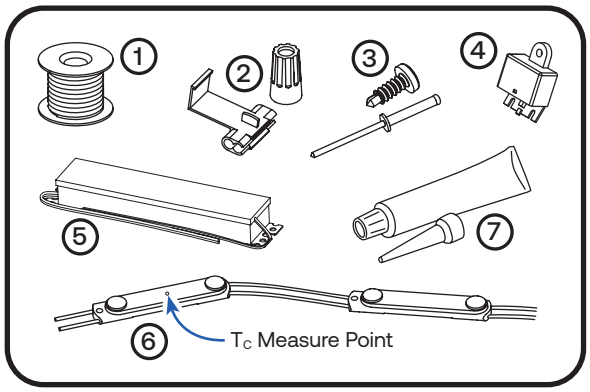

1. UL approved 18 AWG (0.82 mm^2) supply wire
2. UL approved 22-14 AWG (0.33-2.08 mm^2) wire connectors or 22-18 AWG (0.33-0.82 mm^2) in-line/IDC connectors
3. #6 (M3) screws, 1/8 inch (3.2 mm) rivets, or electrical grade RTV silicone or equivalent
4. Weather box GEXNWB2 (optional)
5. 24 Volt Power Supply
6. Tetra® MAX LED modules
7. Electrical grade RTV silicone:
   - Momentive RTV 6700 Series Silicone Rubber Adhesive Sealant
   - Momentive White Blanc RTV 162 Silicone Rubber Adhesive Sealant-Electrical Grade
   - Dow Corning 3140 - Non-Corrosive Flowable (clear)
   - Dow Corning 3145 - Non-Corrosive Nonflowable (clear or gray)
   - Dow Corning RTV 748 Non-Corrosive Sealant-White

© 2025 Current Lighting Solutions, LLC. All rights reserved. GE and the GE monogram are trademarks of the General Electric Company and are used under license. Information provided is subject to change without notice. All values are design or typical values when measured under laboratory conditions.

Dimensions

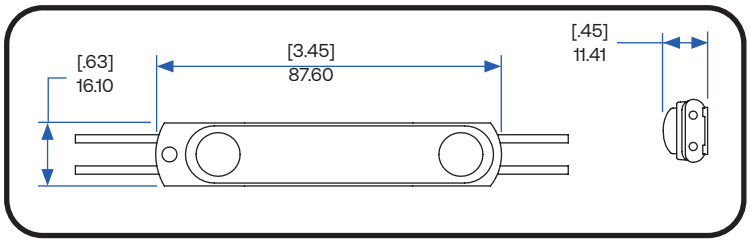

Layout Modules

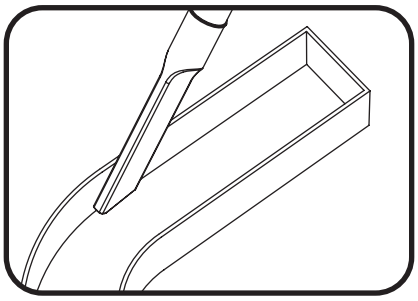

1 Before you begin, clean surfaces and remove all debris from the inside of the channel letter.Clean the surfaces with a 50:50 mixture of isopropyl alcohol (IPA) and water and let dry.

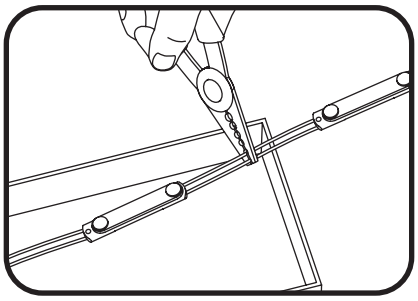

2 Measure and cut Tetra LED strip to the appropriate length for each letter. Cuts can be made between any of the modules.

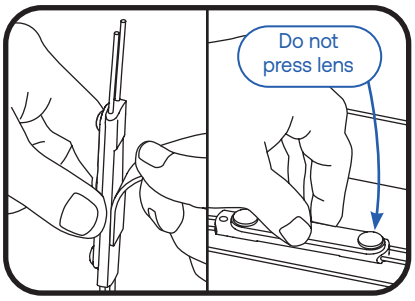

3 Remove tape backing and stick LED modules into place. When using tape apply approximately 15 psi pressure on the module (avoid the lens dome surface) for 5 seconds, full bonding strength after 24 hours. Continue until you have reached the end of the strip.

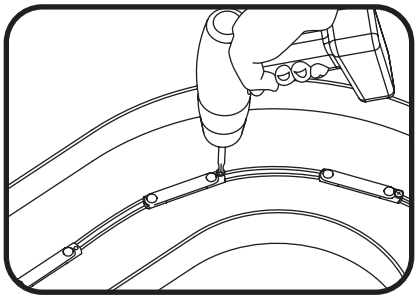

4 Use rivets, screws, or electrical grade RTV silicone to secure at least every fifth LED module within the channel letter. Use #6 (M3) pan headed metal screws, 1/8-inch (3.2 mm) rivets, or electrical grade RTV silicone.

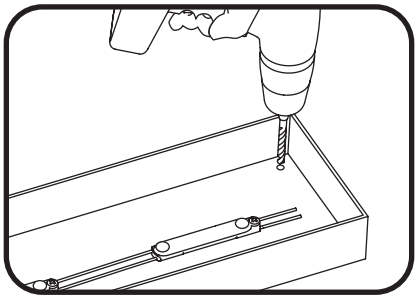

5 Drill a 1/4-inch (6.4 mm) hole near the LED strip and grommet the hole for supply wire access.

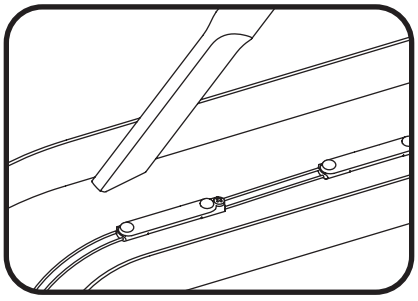

6 Remove all the debris from the inside of the channel letter and replace the sign face.

NOTE: For halo-lit applications LED modules should be mounted on UL recognized clear acrylic or polycarbonate. The light output from the LED system should be directed back into the sign enclosure. This will allow for uniform backlighting of the sign and will provide simple mounting.

© 2025 Current Lighting Solutions, LLC. All rights reserved. GE and the GE monogram are trademarks of the General Electric Company and are used under license. Information provided is subject to change without notice. All values are design or typical values when measured under laboratory conditions.

Electrical Connections

NOTE: Do not use connectors pre-filled with silicone grease/mineral base protective grease or use silicone grease to seal connections.

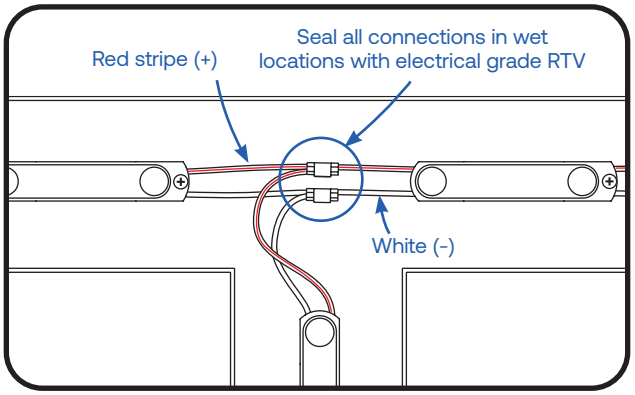

1 Connect LED strips using in-line (IDC) connectors or twist-on wire connectors.

NOTE: Seal all connections in wet locations with electrical grade RTV silicone.

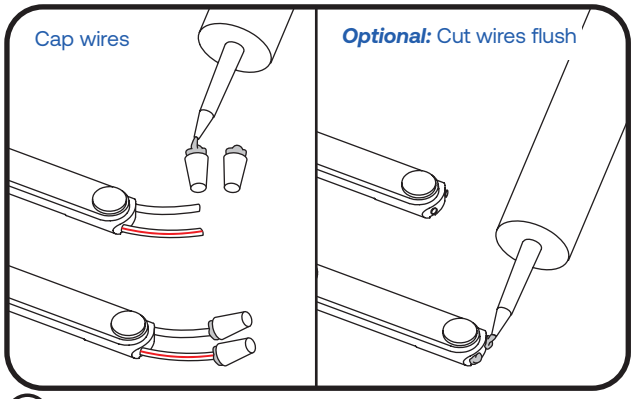

2 Must cap all exposed wires with appropriate wire connectors and seal with electrical grade RTV silicone. ***Optional:*** Cut wires flush to the module and seal with electrical grade RTV silicone.

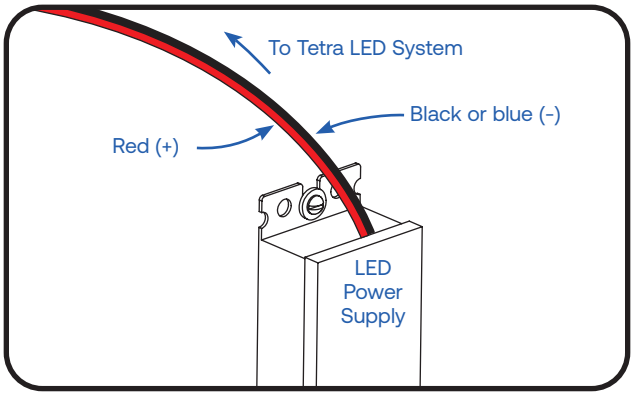

3 Run a wire from the LED power supply to the LED module and connect.

NOTE: Must be used with **Class 2 24 Volt Power Supplies.**

NOTE: Refer to ***Maximum Loading & Remote Mounting Specifications*** on page 5.

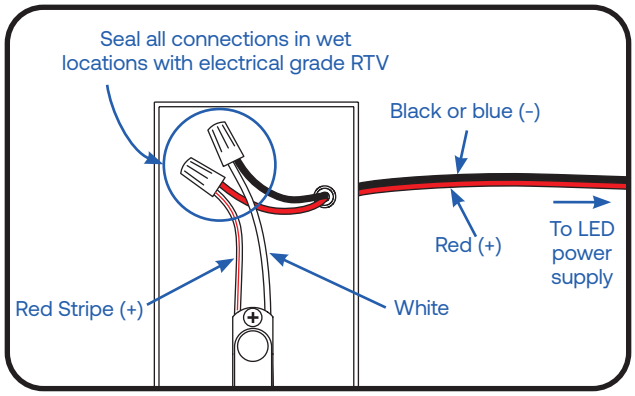

4 Connect the red stripe wire (+) of the LED strip to the red wire (+) of the power supply. Connect the white wire (-) of the LED strip to the black or blue wire (-) of the LED power supply.

NOTE: All electrical connections should be suitably protected from mechanical damage and the environment. Seal all connections in wet locations with electrical grade RTV silicone.

OPTIONAL

A Weather Box (GEXNWB2) may be used to house and seal Class 2 connections as described below:

A) Insert wire connectors into weather box. Fill with electrical grade silicone and close box.

B) Secure the weather box using a #6 or #8 (M2 or M3) screw.

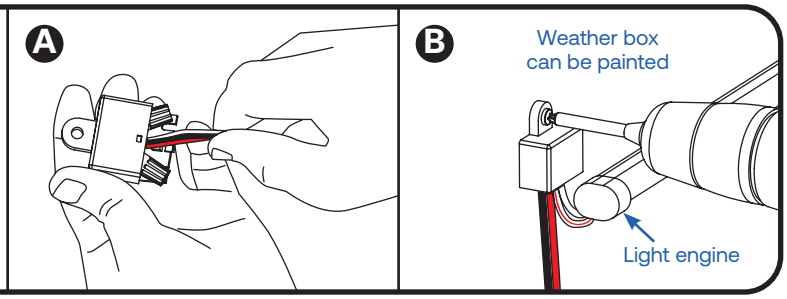

© 2025 Current Lighting Solutions, LLC. All rights reserved. GE and the GE monogram are trademarks of the General Electric Company and are used under license. Information provided is subject to change without notice. All values are design or typical values when measured under laboratory conditions.

Retrofit Instructions FOR UL ONLY

1. ***(Existing Signs Only)*** Prior to installation, survey the site for information regarding power and accessibility inside and outside the building. Ensure that the branch circuit supplying the existing transformer or ballast will be within the voltage ratings of the new LED power supply, and have a current rating not exceeding 20A, or that permitted by applicable local, state, or country electrical codes (whichever is less).
2. ***(Existing Signs Only)*** Remove the existing lighting equipment to be replaced, such as neon tubing or fluorescent tubes; and associated transformers and ballasts. Care should be taken not to break the existing neon or fluorescent tubes. ***NOTE:*** Follow all federal and local regulations when disposing of neon tubing, fluorescent tubes, transformers and ballasts.
3. ***(Existing Signs Only)*** If removal of the existing lighting equipment eliminates the disconnect switch, as required by applicable local, state, or country electrical codes; a new disconnect switch must be installed.
4. ***(Existing Signs Only)*** Repair and seal any unused openings in the electrical enclosure. Openings greater than 12.7-mm (1/2-in) diameter require a metal patch secured by screws or rivets and caulked with non-hardening caulk. Smaller openings may be sealed with non-hardening caulk.
5. ***(Existing Signs Only***) A clean and dry mounting surface ensures optimum adhesion if the self-adhesive method of mounting is chosen. Follow the manufacturer's directions when using a non-oil based solvent, such as rubbing alcohol to clean the surface area where you intend to mount the module. Before installing, ensure the surface is dry.
6. Using the layout guidelines above, determine required number of LED modules required to illuminate the sign.
7. A 24VDC Class 2 Power Supply, as listed below, must be used with this retrofit kit. Using the Maximum Loading chart below, determine the number of Power Supplies required to power the number of LED modules required to illuminate the sign, so as not to overload the Power Supply chosen.
8. Follow the instructions above to properly mount the LED modules.
9. Connect the DC output of the power supply to the LED modules using the Electrical Connections instructions above.
10. Connect the power unit to the supply in accordance with the applicable local, state, and country electrical codes, and the instructions found in the power supply installation guide.
11. If required, the disconnect switch shall be installed by qualified personnel, in accordance with applicable local, state, and country electrical codes.

Troubleshooting

Symptom	Solution
All letters are OFF	• Check AC input connection and/or check circuit breaker. • Check wire connection(s) at the Tetra® LED System and power supply for improper termination(s) or short circuits. Properly terminate or replace the wire connection(s). • Check that connections are the red striped wire (+) of the LED strip to the red wire (+) of the power supply and the white wire (-) of the LED strip to the black or blue wire (-) of the power supply.
Some LEDs appear dim	• Ensure the overall length of the Tetra® LED System does not exceed the maximum load. • Ensure the length of supply wire is equal to or below the recommended remote mounting distance. • Ensure the overall length of the Tetra® LED System does not exceed the maximum load.
Some of the letters are not illuminated	• Check wire connection(s) at the Tetra® LED System and power supply for improper termination(s) or short circuits. Properly terminate or replace the wire connection(s). • Check that connections are the red striped wire (+) of the LED strip to the red wire (+) of the power supply and the white wire (-) of the LED strip to the black or blue wire (-) of the power supply.
Shadows	• Re-route supply wire and secure to the back of the can with electrical grade RTV silicone. Adjust wire connector orientation so that it does not cover any LEDs. • Adjust LED layout to ensure uniformity of illumination on the face of the letter.

Tips

- For optimal light uniformity in halo-lit applications the Tetra® LED modules should be mounted on UL recognized plastic and the light output from the Tetra® LED system should be directed back into the sign enclosure. This will allow for uniform backlighting of the sign and will provide simple mounting for the Tetra® LED system.
- A best practice for the supply wire at the point at which it is brought into the sign is to have a drip loop on the inside of the letter to keep water from collecting on the Tetra® LED strip.
- These products are not required to be enclosed or protected from weather.

© 2025 Current Lighting Solutions, LLC. All rights reserved. GE and the GE monogram are trademarks of the General Electric Company and are used under license. Information provided is subject to change without notice. All values are design or typical values when measured under laboratory conditions.

Maximum Loading per 24V DC Power Supply

Power Supply	GEMX24RD-W1	GEMXH24RD-W1	GEMX24GL-W1	GEMX24BL-W1	GEMX24YG-W1
Rating per module	24VDC 19mA/module 0.456W/module	24VDC 31mA/module 0.744W/module	24VDC 32mA/module 0.768W/module	24VDC 29mA/module 0.696W/module	24VDC 16mA/module 0.384W/module
GEPS24-25U-NA *Load shall not exceed 1.04A*	47 modules/ 31.3 ft. (9.55 m)	29 modules/ 19.3 ft. (5.89 m)	28 modules/ 18.7 ft. (5.69 m)	31 modules/ 20.7 ft. (6.3 m)	56 modules/ 37.3 ft. (11.38 m)
GEPS24D-60U-GLX ***GELP24-60U-GL** *Load shall not exceed 2.5A*	120 modules/ 80 ft. (17.88 m)	73 modules/ 48 ft. (14.83 m)	71 modules/ 47 ft. (14.42 m)	78 modules/ 52 ft. (15.84 m)	143 modules/ 95 ft. (29.05 m)
GEPS24-100U-GLX *Load shall not exceed 4.0A*	180 modules/ 120 ft. (36.58 m)	110 modules/ 73.3 ft. (22.35 m)	107 modules/ 71.3 ft. (21.74 m)	118 modules/ 78.6 ft. (23.98 m)	210 modules/ 140 ft. (42.67 m)
GEPS24-100U-GLX2/TT **USVI-100024FBA** **USVI-100024FE** **GEPS24D-100U-NA** **GEPS24LT-100U-NA** **GEPS24LT-100U-GLX2** **GEPS24W-100U-GLX2** *Load shall not exceed 4.0A*	190 modules/ 126.6 ft. (38.58 m)	116 modules/ 77.3 ft. (23.5 m)	113 modules/ 75.3 ft. (22.9 m)	124 modules/ 82.6 ft. (25.1 m)	226 modules/ 150.6 ft. (45.9 m)
GEPS24-200U-GLX2 *Load shall not exceed 4.0A per each (of 2) output channels*	190 modules/ 126.6 ft. (38.5 m) per bank 380 modules/ 253.2 ft. (77.2 m) per PS	116 modules/ 77.3 ft. (23.5 m) per bank 232 modules/ 154.6 ft. (47.1 m) per PS	113 modules/ 75.3 ft. (22.9 m) per bank 226 modules/ 150.6 ft. (45.9 m) per PS	124 modules/ 82.6 ft. (25.1 m) per bank 248 modules/ 165.2 ft. (50.3 m) per PS	226 modules/ 150.6 ft. (45.9 m) per bank 452 modules/ 301.2 ft. (91.8 m) per PS
GEPS24-300U-GLX2 *Load shall not exceed 4.0A per each (of 3) output channels*	190 modules/ 126.6 ft. (38.5 m) per bank 570 modules/ 379.8 ft. (155.8 m) per PS	116 modules/ 77.3 ft. (23.5 m) per bank 348 modules/ 231.9 ft. (70.7 m) per PS	113 modules/ 75.3 ft. (22.9 m) per bank 339 modules/ 225.9 ft. (68.8 m) per PS	124 modules/ 82.6 ft. (25.1 m) per bank 372 modules/ 247.8 ft. (75.5 m) per PS	226 modules/ 150.6 ft. (45.9 m) per bank 678 modules/ 451.8 ft. (137.7 m) per PS

NOTE: The maximum loading claimed in the table is at ambient temperature 25°C (77°F).
For linear long runs, center connection to the LED strip is recommended to minimize voltage drop.
In European applications (or other non-UL/CSA applications) drivers other than those mentioned above are available. Follow the load chart above for equivalent power levels, or refer to the SIGN311 "Driver Application Guide" for other power levels.
*GELP24-60U-GL minimum load = 44 modules / 29 ft. (8.94 m) for GEMX24RD-W1, 27 modules / 18 ft. (5.59 m) for GEMXH24RD-W1 and GEMX24GL-W1, 29 modules / 19 ft. (5.90 m) for GEMX24BL-W1, or 53 modules / 35 ft. (10.77 m) for GEMX24YG-W1.

Maximum Remote Mounting Distance

Power Supply Wattage	18 AWG/0.82 mm² Supply Wire	16 AWG/1.31 mm² Supply Wire	14 AWG/2.08 mm² Supply Wire	12 AWG/3.31 mm² Supply Wire
25W	120 ft./36.6 m	–	–	–
60W, 100W, 200W, 300W	20 ft./6.1 m	25 ft./7.6 m	35 ft./10.6 m	40 ft./12.1 m

This product is intended solely for the use of non-residential signage lighting and is not intended for use in any other applications.

IP66 rated
Conforms to the following standards:

Electrical products must not be thrown out with domestic waste. They must be taken to a communal collecting point for environmentally friendly disposal in accordance with local regulations. Contact your local authorities or stockist for advice on recycling. The packaging material is recyclable. Dispose of the packaging in an environmentally friendly manner and make it available for the recyclable material collection-service.

Current Lighting Solutions, LLC
Cleveland, OH 44124

© 2025 Current Lighting Solutions, LLC. All rights reserved. GE and the GE monogram are trademarks of the General Electric Company and are used under license. Information provided is subject to change without notice. All values are design or typical values when measured under laboratory conditions.