Recessed Double Contact Lampholders
For 800 and 1500mA *Instant Start* Lamps

KULKA® Wiring Devices

Internally shunted for single wire electronic ballast applications

582.GDF-IS™ & 583.GDF-IS™ Series Lampholders

Completely isolates the face of the socket from ground. No metal clips means no corrosion or electrical grounding.

583.GDF-IS™ Spring Loaded



582.GDF-IS™ Stationary

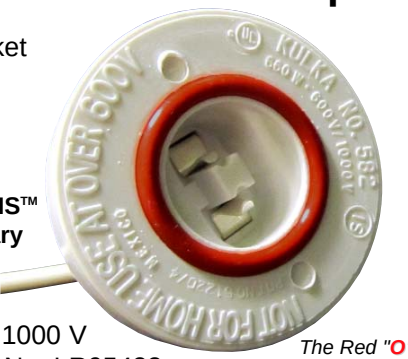

The Red "O" Ring is a trademark of Voltarc®.

Specifications

Rating: 660 Watts, dual rated 600 V or 1000 V

Listing: UL File No. E-13408; CSA File No. LR95423. UL listed and CSA certified for outdoor use in enclosed signs and fixtures.

Mounting: Snap-In, Dead Front Design

Materials

Housing: White urea

Contacts: Horizontal or vertical silver plated phosphor bronze, self wiping.

Mounting Clips: Fabulex™ Thermoplastic.

Gasket: Red silicone treated neoprene "O" ring

Termination: Lead wire 9" (228.6 mm) long, 18 AWG stranded and tinned lead wires, 1/2" stripped, standard. Wire rated: AWM 1000V, 90°C (194°F). Special lengths available upon request.

Socket Sentry T8 & T12

The Vertical Lamping Solution....

Perfect with Kulka Sockets

Specially designed for use in vertical lamping applications to protect the bottom lampholder.



Socket Sentry™ is a trademark of Voltarc®.

Kulka® 582.GDF-IS™ / 583.GDF-IS™ Series

Spring Part No.	Stationary Part No.	
583.GDF-IS	582.GDF-IS	Snap-in mounting, 9" long leads with gasket and pitch
583.GDF-IS-12	582.GDF-IS-12	Snap-in mounting, 12" long leads with gasket and pitch
	582.GDF-IS-A	Snap-in mounting, 9" long lead, self aligning
583.PDF-IS	582.PDF-IS	Snap-in mounting, 9" long leadwires with pitch only

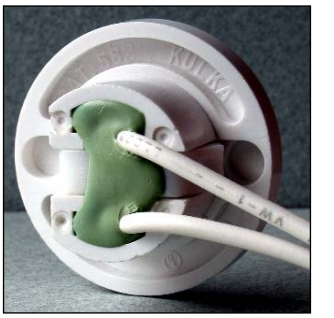

Pitch to insulate electrical contacts (*588.GDF™ Standard back shown*)

**582.GDF-IS/583.GDF-IS Series packaged 250/box, except 582.GDF-IS-96/583.GDF-IS-96 packaged 100/box*

Special lead wire lengths available upon request, consult sales department.

*Options: Add Suffix "**A**": for Self Aligning Mounting Clip, Ideal for U-Lamp Applications*

The Red "O" Ring is a trademark of Voltarc®.

Mounting Panel Cutout
Recommended Panel Thickness
.031-.062"

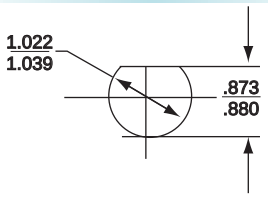

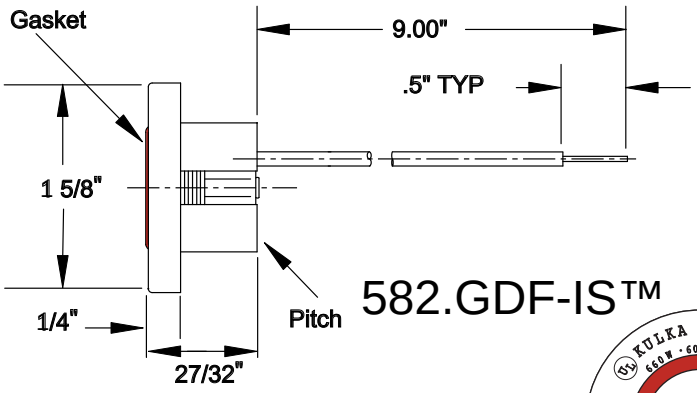

582.GDF-IS™

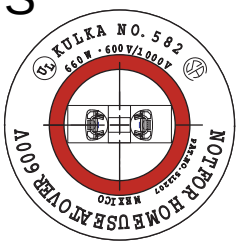

For U-Lamps
582GDF-IS-A Self- Aligning

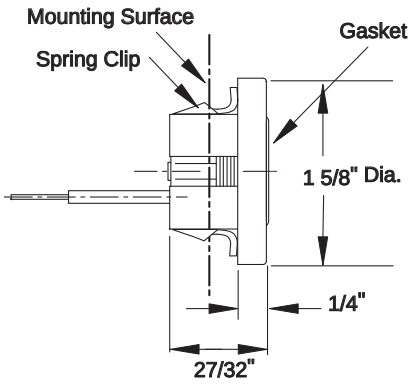

583.GDF-IS™

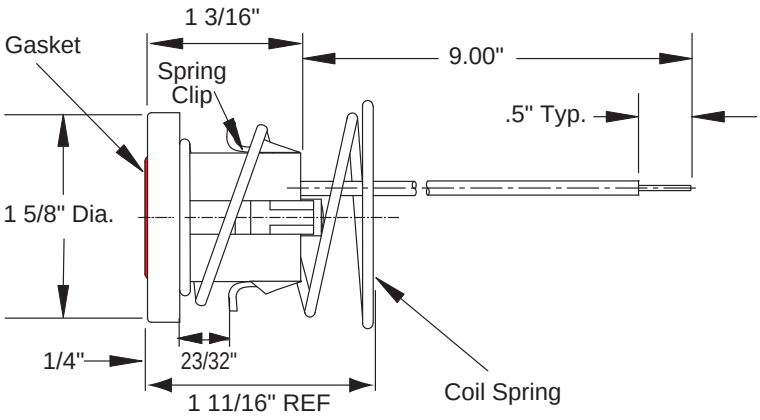

Panel to Panel Spacing

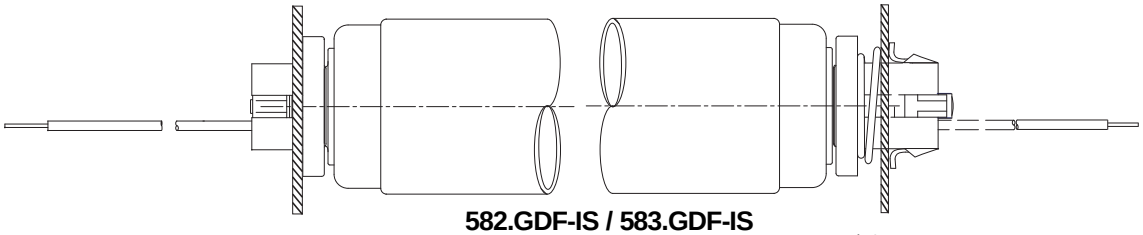

582.GDF-IS / 583.GDF-IS
Nominal Lamp LENGTH minus 1 3/4" +1/16" -1/32"
582.GDF-IS-A / 583.GDF-IS
Nominal Lamp LENGTH minus 1 11/16" +1/16" -1/32"

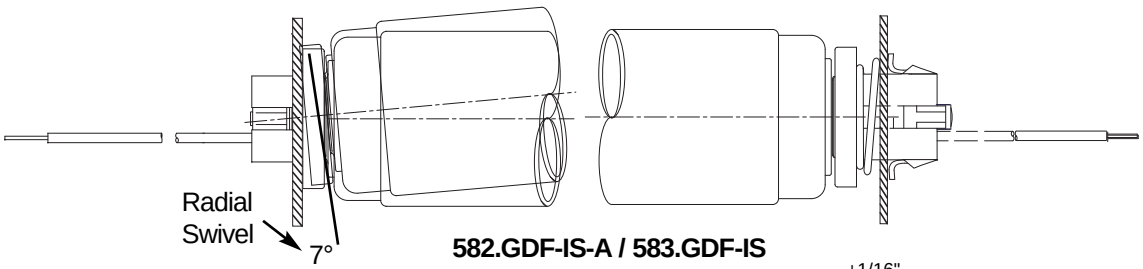

582.GDF-IS-A / 583.GDF-IS
Nominal Lamp LENGTH minus 1 19/32" +1/16" -1/32"