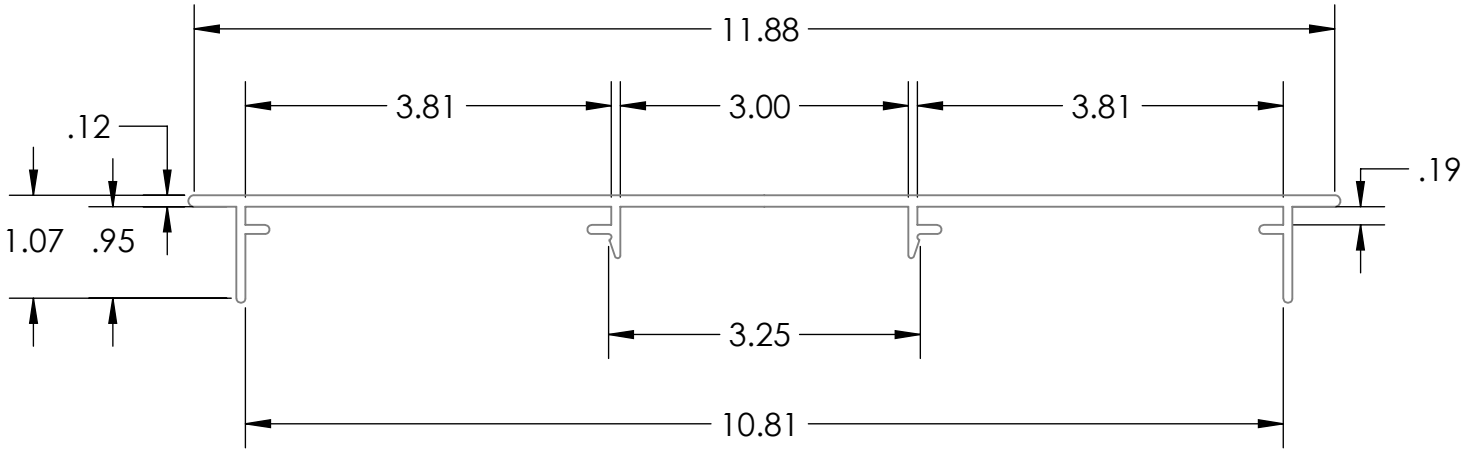

MATES WITH:

- 1280906 - EC-IDS RETAINER
- 1280902 - EC-IDS 12" RACEWAY
- 1280903 - CORNER ANGLE

EST. WT/FT 2.154		UNLESS OTHERWISE SPECIFIED:		NAME	DATE
		DIMENSIONS ARE IN INCHES TOLERANCES: FRACTIONAL ± ANGULAR: MACH ± BEND ± TWO PLACE DECIMAL ± THREE PLACE DECIMAL ±	DRAWN		
			CHECKED		
			ENG APPR.		
			MFG APPR.		
		INTERPRET GEOMETRIC TOLERANCING PER:	Q.A.		
		MATERIAL 6063-T6 ALUMINUM	COMMENTS:		
NEXT ASSY	USED ON	FINISH MILL FINISH			
APPLICATION		DO NOT SCALE DRAWING			

PROPRIETARY AND CONFIDENTIAL

THE INFORMATION CONTAINED IN THIS DRAWING IS THE SOLE PROPERTY OF EXCELLART SIGN PRODUCTS, LLC. ANY REPRODUCTION IN PART OR AS A WHOLE WITHOUT THE WRITTEN PERMISSION OF <INSERT COMPANY NAME HERE> IS PROHIBITED.

P/N: 1280900

TITLE:

EXCELLART SIGN PRODUCTS, LLC

SIZE	DWG. NO.	REV
A	EC-IDS 12 FRAME	

SCALE: 1:4 SHEET 1 OF 1