High Intensity Discharge Lamps

Bulb Identification 3-2
Lamp Locator 3-2
Base Identification 3-5
Introduction 3-5
Product Information 3-6
HID Brand Name Cross Reference 3-8
Section Headings 3-8
ConstantColor® CMH® Metal Halide Lamps
CMH® MR16 ULTRA 3-9
CMH® MR16 3-9
CMH® PAR Integral Ballast 3-9
CMH® PAR 3-9
CMH® Elliptical 3-10
CMH® Elliptical Open-Rated 3-10
CMH® Single-Ended G12 ULTRA 3-10
CMH® Single-Ended G12 3-11
CMH® Double-Ended TD 3-11
CMH® GU6.5 ULTRA 3-11
CMH® GU6.5 3-11
CMH® Mini ULTRA 3-11
CMH® Mini's 3-11
CMH® Chromafit™ 3-11
High-Watt CMH® SPXX 3-11
PulseArc® Multi-Vapor® Metal Halide Lamps 3-12
Multi-Vapor® Metal Halide Lamps 3-13
High Output and XHO Multi-Vapor® Metal Halide Lamps 3-13
Sports Lighting 3-14
Protected Multi-Vapor® Metal Halide Lamps 3-14
Chromafit™ Multi-Vapor® Metal Halide Lamps (HPS Retrofit Lamps) 3-15
Lucalox® High Pressure Sodium Lamps 3-15
Ecolux® High Pressure Sodium Lamps (TCLP Compliant) 3-15
Ecolux® Standby Longlife Lucalox® Lamps (TCLP Compliant) 3-16
Standby Longlife Lucalox® Lamps 3-17
Ecolux® NC Non-Cycling High Pressure Sodium Lamps (TCLP Compliant) 3-17
Lucalox® PSL Lamps for Greenhouse 3-17
Mercury Lamps 3-17
General Information 3-18
Operating Notes 3-19
Dimming 3-19
Footnotes 3-19
Warning Notices 3-20
Important Notice 3-20
Warning and Caution Notices 3-21
Cross-Reference 3-30

Bulb Identification

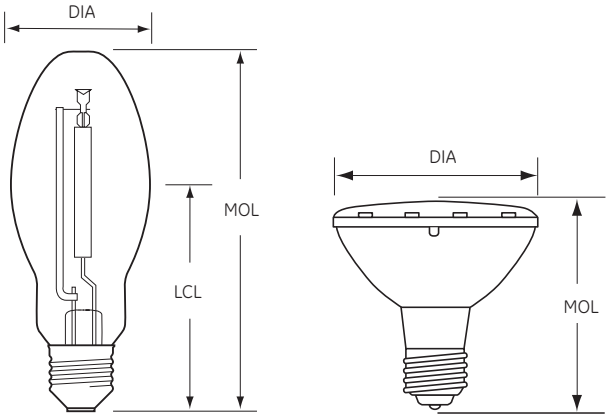

DIA: Diameter of bulb at widest point.

MOL: Maximum Overall Length including base or pins.

LCL: Distance between the center of the arc tube and the Light Center Length reference plane.

Note: Lamp drawings are not drawn to scale. Be sure to check size and dimension information when identifying each lamp.

To convert inches to millimeters, multiply the dimension (in inches) by 25.4 (i.e. 1.5" x 25.4 = 38.1 mm).

Lamp Locator

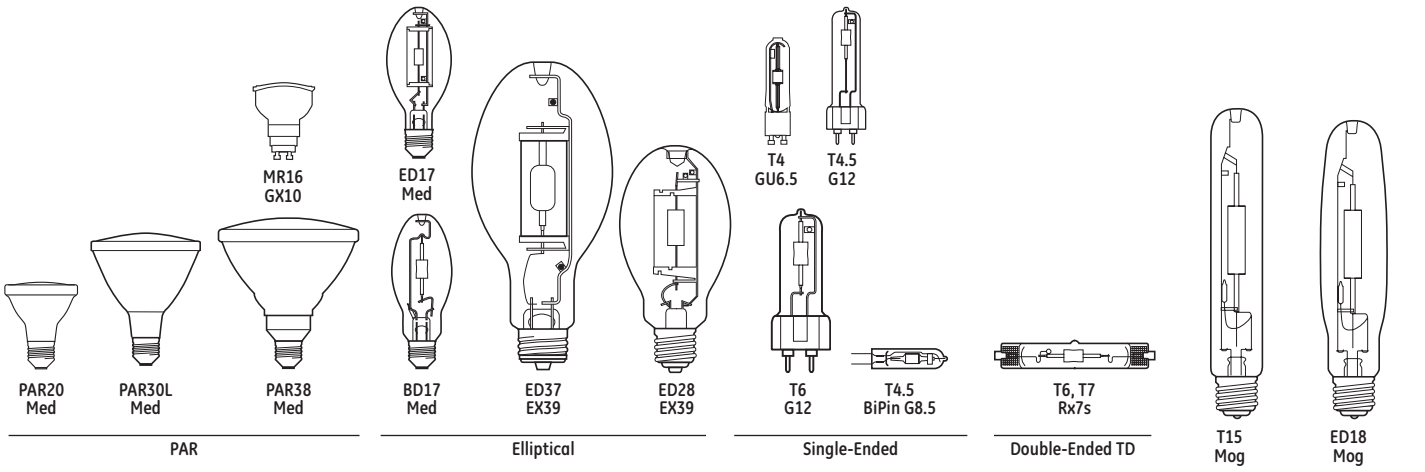

ConstantColor® CMH® Ceramic Metal Halide

CMH® Chromafit™ Ceramic Metal Halide (HPS Retrofit Lamps)

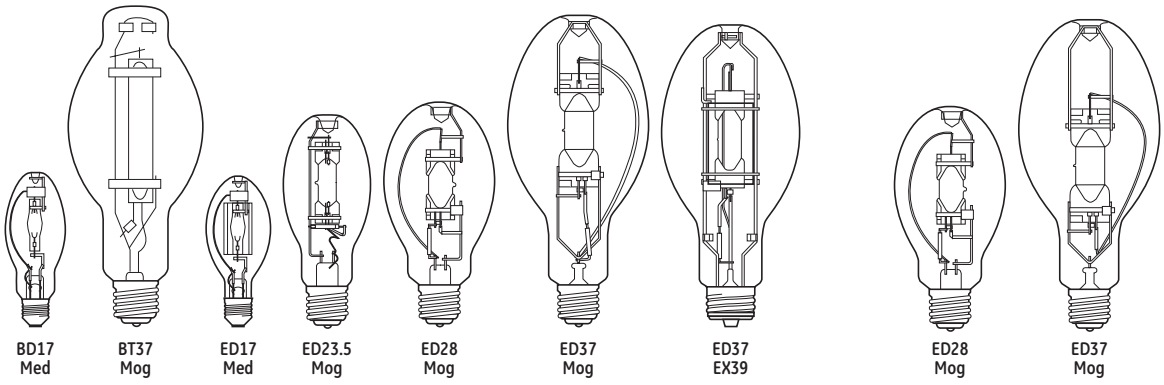

PulseArc® Multi-Vapor® Metal Halide Lamps

Chromafit™ Multi-Vapor® Metal Halide Lamps (HPS Retrofit Lamps)

Lamp Locator (continued)

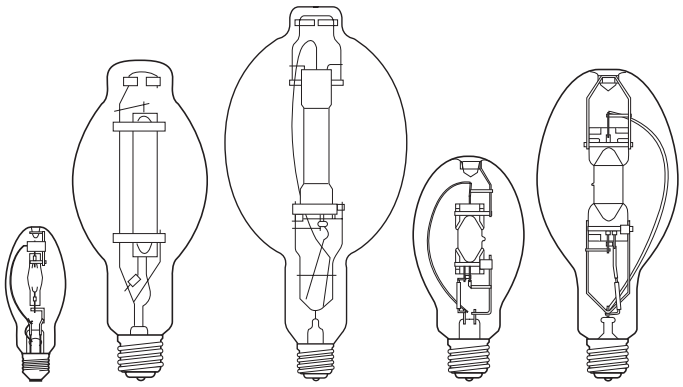

Multi-Vapor® Metal Halide Lamps

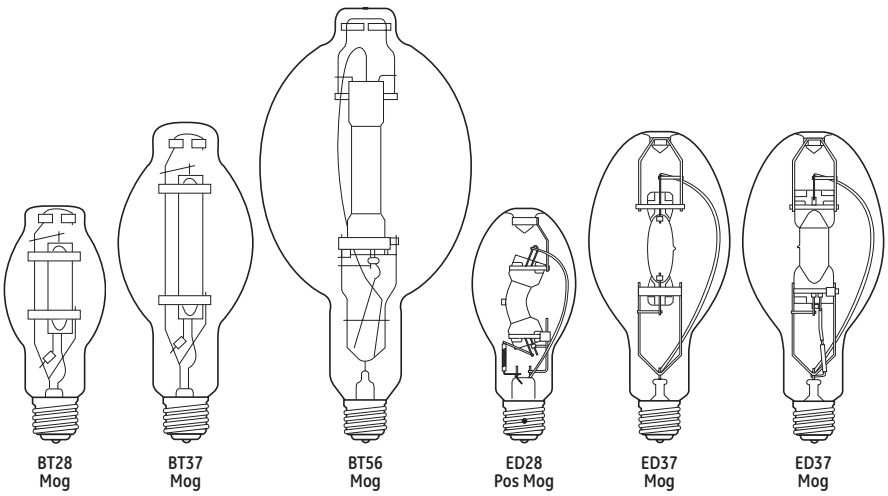

High Output and XHO Multi-Vapor® Metal Halide Lamps

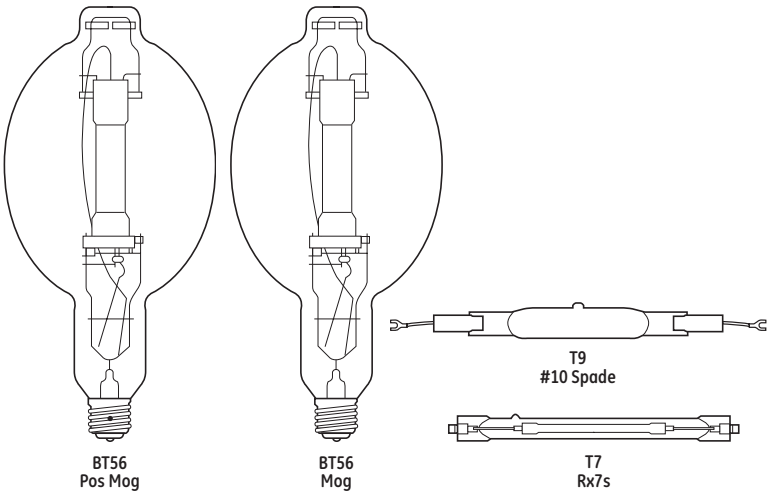

Sports Lighting

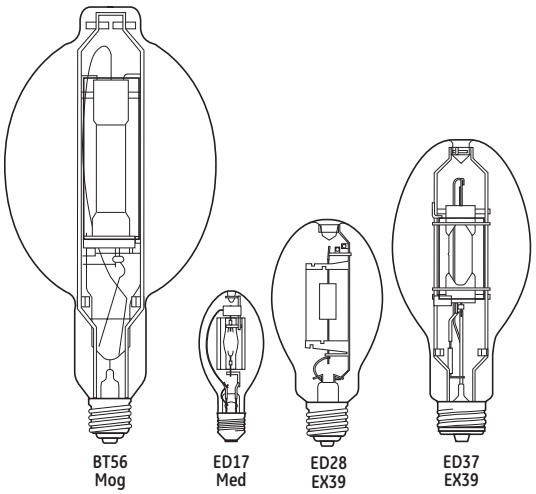

Protected Multi-Vapor® Metal Halide Lamps

Lamp Locator (continued)

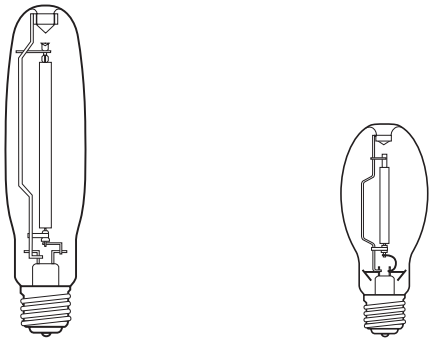

Ecolux® NC Non-Cycling High Pressure Sodium Lamps
(TCLP Compliant)

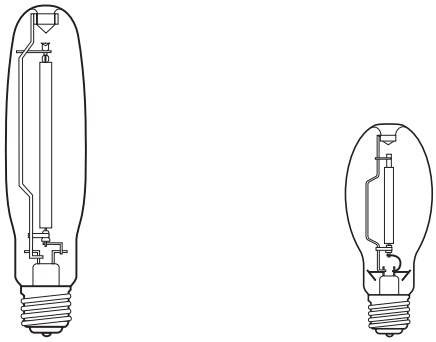

Ecolux® High Pressure Sodium Lamps
(TCLP Compliant)

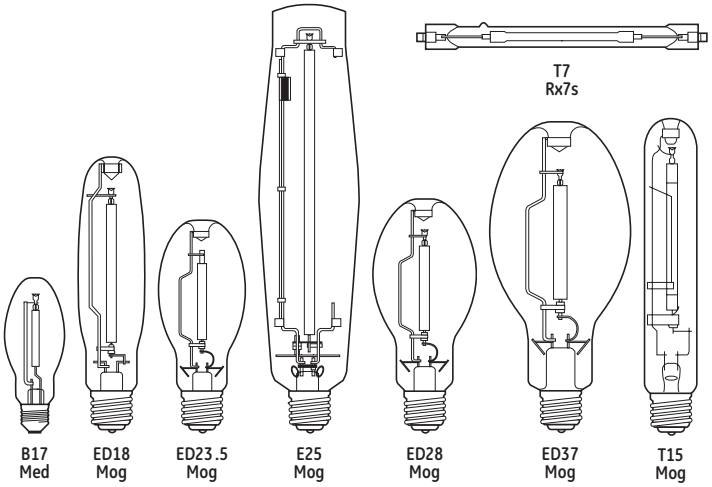

Lucalox® High Pressure Sodium Lamps

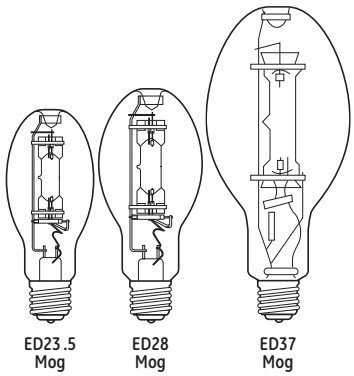

Mercury Lamps

Base Identification

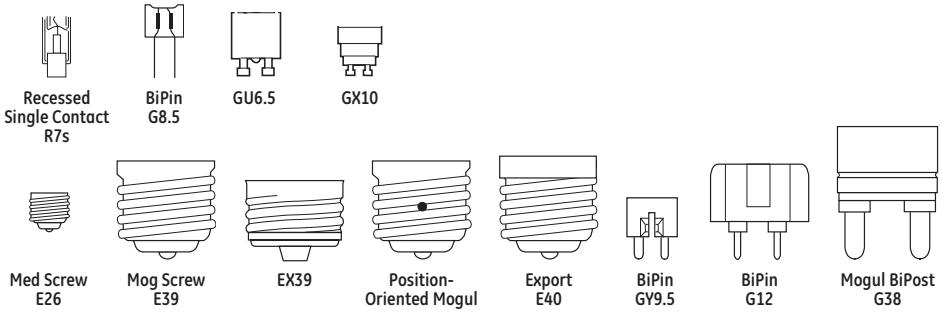

Introduction

GE HID lamps provide the following benefits:

High Efficacy/Low Operating Cost.
HID is generally the most efficient light source. Better efficiency almost always means lower operating cost.

Long Life.
Most HID lamps have life ratings that are better than incandescent lamps and similar to fluorescent lamps.

Compact Size.
An HID lamp produces high light output from a relatively compact source. Like incandescent, it is a "point" light source, which allows for good optical control.

The chart at right shows how HID lamps compare to incandescent, halogen, and fluorescent in terms of efficiency and rated life. Efficiency is measured in lumens per watt (LPW). Rated life for most lamp types is the number of burning hours when 50% of the tested samples have failed and 50% are still operational. For both HID and fluorescent, lamp life depends on the number of hours per start.

The combination of high efficiency and long life makes HID an ideal light source for many commercial and industrial applications.

Typical Lamp Characteristics

Lamp Type	Typical LPW	Rated Life (in hours)
Incandescent	5-22	750-2000
Halogen	12-36	2,000-6000
Compact Fluorescent	27-80	9,000-20,000
Fluorescent	75-100	5,000-36,000
Mercury	50-60	12,000-24,000+
ConstantColor® CMH®	80-95	10,000-20,000
Multi-Vapor® Metal Halide	80-115	10,000-20,000
Lucalox® High Pressure Sodium	90-140	10,000-40,000

Suggested Color Applications for HID Lamps

CMH®: Stores, people places, display, accent.

MVR: Stores, public spaces, industrial, gymnasiums, floodlighting signs and buildings, parking areas, sports.

MVR/C: Same as MVR – warmer color-diffuse coating reducing glare.

MXR: Warm color (3200K) – good match for halogen.

LU: Street lighting, parking areas, industrial, floodlighting, security, CCTV.

LU/DX: Floodlighting, parking areas, indoor/outdoor pedestrian malls, industrial, security, roadway.

Deluxe (DX) Mercury: Stores, public spaces – metal halide lamps however, are preferred.

Clear Mercury: Landscape lighting, specialized floodlighting such as green copper roofs.

Product Information

GE ConstantColor® CMH® and CMH® Ultra Ceramic Metal Halide Lamps (pgs 3-9 to 3-11)

- Color uniformity lamp-to-lamp and over lamp life
- Excellent color rendering (80+ CRI, 90+ CRI for SPXX versions)
- Delivers more light than standard metal halide (10%–20% more)
- Lamp operates at high efficacy—up to 95 lumens per watt
- Many are universal burn—may be operated in any position
- Perfect for retail and commercial display lighting, accent and floodlighting, lobby and foyer lighting. Ideal for "people places"

GE CMH® Chromafit™ Ceramic Metal Halide Lamps (pg 3-11)

- Convert High Pressure Sodium sockets to crisp, white ceramic metal halide light (80+ CRI)
- Operate on standard HPS ballasts and auxiliary equipment
- Universal burn—may be operated in any position
- Uses: Area lighting, industrial and "people places"
- Enclosed glass fixtures only

GE PulseArc® Medium Based Metal Halide Lamps (/MED models) (pg 3-12)

- Low wattage metal halide lamps (formerly Halarc®) are now part of the PulseArc® family
- Compact source
- Sparkling white light (3000-4000K) and very good color rendition (70-75 CRI)
- High efficacy—more than 3 times the lumens per watt of incandescent
- Long life—up to 15 times longer than incandescent systems and up to 7 times longer than most PAR and R systems, saving maintenance and labor costs
- Superior optical control
- Uses: Display lighting, downlighting, floodlighting, corridors, lobbies, walkways; retail, office, commercial

GE PulseArc® Multi-Vapor® Metal Halide Lamps (/PA Models) (pgs 3-12 to 3-13)

- Designed for operation only on approved ballasts with metal halide pulse ignitors
- More light—400W lamps provide highest initial and highest maintained lumens versus other standard universal or vertical base-up lamp options
- 50% longer life—400W lamps provide 30,000 hours life when burned on 120 hour on/1 hour off cycle (approximately continuous)
- Faster hot restrike—less than 4 minutes versus 10-15 minutes for typical metal halide lamps

GE Multi-Vapor® Metal Halide Lamps (pg 3-13)

- Sparkling white light (3000-4000K) and very good color rendition (65-75 CRI)
- Warm, rich 3000K color of SP30 blends well with incandescent, halogen and triphosphor fluorescent lamps for interior retail applications
- High efficacy—more efficient than incandescent, mercury and most fluorescent sources
- Long life—10,000-20,000 hours for most types
- Full line, 150-1000 watts, to meet most application needs
- Uses: Downlighting, floodlighting, corridors, lobbies, walkways; retail, commercial, industrial

GE High Output Multi-Vapor® Lamps (pgs 3-13 to 3-14)

- More light—optimized for higher light output in horizontal, vertical base-up and base-down burn applications
  - Horizontal burn lamps provide up to 25% more light than standard universal burn equivalents
  - 400W vertical burn lamps provide up to 22% more light than standard universal burn equivalents; the highest lumen lamps available for operation on standard M59 ballasts
- Longer life—horizontal burn lamps last up to 67% longer than universal burn lamp equivalents, significantly reducing replacement lamp and maintenance costs

GE Protected High Output Multi-Vapor® Lamps (/O) (pgs 3-14 to 3-15)

- Protective quartz jacket surrounds the arc tube
- The/O suffix and/or the "MPR" prefix in the Lamp Description indicates lamps are suitable for open fixture applications

GE ChromaFit™ Multi-Vapor® Lamps (/R) (pg 3-15)

- Convert high pressure sodium sockets to crisp white metal halide light (65-70 CRI)
- Operate on standard HPS ballasts and auxiliary equipment
- Uses: Area lighting, industrial and "people places"

GE Lucalox® High Pressure Sodium Lamps (pg 3-15)

- Very high efficacy/low operating cost
- Excellent lumen maintenance—over 90% @ 50% of life
- Very long life—24,000+ hours
- Universal burn—can be operated in any position without affecting performance
- Warm color
- For open or enclosed fixtures
- Uses: Industrial, roadway, security, floodlighting

GE Ecolux® High Pressure Sodium Lamps (/ECO) (pgs 3-15 to 3-16)

- Lead-free base. Passes TCLP, which can lower disposal costs.

GE Standby Longlife Lucalox® and Ecolux® Lamps (/SBY) (pgs 3-16 to 3-17)

- Extra arc tube provides light instantly after momentary power interruption, and will increase to 80% light output in 1-2 minutes
- Dual arc tubes provide 40,000 hour rated life
- Operates on standard HPS ballasts and auxiliary equipment
- Uses: Industrial, roadway, security, and hard-to-reach sockets
- Ecolux® lamps use lead-free bases. Passes TCLP, which can lower disposal costs.

Product Information (continued)

GE Ecolux® NC "Non-Cycling" High Pressure Sodium Lamps (/ECO/NC) (pg 3-17)

- Low mercury. Passes TCLP, which can lower disposal costs.
- Non-cycling feature makes locating and replacing end-of-life lamps quick and easy
- Lead-free base
- High efficacy/low operating cost
- 6%-11% higher initial lumens than standard HPS in 100W and 400W versions
- Long life—up to 40,000 hours
- Open or enclosed fixtures
- Uses: Industrial, roadway, security

GE Mercury Lamps (pg 3-17)

- Long life and good efficacy
- Phosphor coated Deluxe lamps provide good color rendering (50CRI)
- Uses: Industrial, roadway, landscapes, residential and commercial security, parking lots

HID Brand Name Cross-Reference

GE	OSRAM/SYLVANIA	PHILIPS
ChromaFit™ Multi-Vapor®	—	—
ConstantColor® CMH®	Powerball® MCP	MasterColor® CDM
Deluxe Lucalox®	—	Ceramalux™ Comfort
E-Z Lux®	Unalux®	Ceramalux™ Retrolux
Ecolux®	Lumalux ECO®	Ceramalux Alto®
Ecolux® NC	Lumalux Plus™/ECO®	Ceramalux Alto® Plus
High Output Multi-Vapor®	Super Metalarc®	Metal Halide
Horizontal Multi-Vapor®	Super Metalarc®	—
Lucalox®	Lumalux®	Ceramalux™
Multi-Vapor®	Metalarc®	Metal Halide
Protected High Output Multi-Vapor®	Metalarc® Pro-Tech™	—
PulseArc®	Super Metalarc® Pulse Start	Pulse Start

GE	OSRAM/SYLVANIA	PHILIPS
Standby Longlife Lucalox®	Lumalux® Standby	Instant Restrike Ceramalux™
Watt-Miser® Multi-Vapor®	Metalarc® Supersaver®	—

ATTENTION: This brand-name cross-reference chart is provided only as a quick reference. Other lamp company brand listings may only represent a near equivalent, versus an identical match to GE Lighting brands. Individual lamp manufacturers' performance specifications should be consulted. Lamp performance may be affected by environmental conditions, ballast type and/or other auxiliary equipment.

Headings in this catalog section

The following terms and descriptions can help you when checking High Intensity Discharge lamp specifications and when ordering products. Within each product line, lamps are divided into families. Within families, lamps are listed by wattage. In each of these wattage groups, lamps are listed by bulb shape.

Bulb Shape: Bulb shape followed by its size (the maximum diameter of the bulb expressed in eighths of an inch).

Energy Used – Nominal Watts: Energy Used (as defined by FTC Lamp Label Rules). To estimate energy consumption (kWh), multiply watts x hours of use and divide by 1000.

Mean Lumens: Lamp light output (lumens) at 40% of rated lamp life for Metal Halide lamps and 50% of rated life for Mercury and HPS lamps.

LET (Lamp Enclosure Type): Describes fixture requirements for this lamp.

CBCP (Center Beam Candlepower): For reflector-type lamps. Center Beam Candlepower is the intensity (candelas) at the center or maximum intensity of the beam. Used only for ConstantColor® CMH® Metal Halide Lamps.

Color Temperature Kelvins (K): A measure of the visual "warmth" or "coolness" of the light from the lamp. The higher the value the whiter or "cooler" the light appears.

LCL (in): Distance between the center of the filament and the Light Center Length reference plane, in inches.

Case Qty: Number of product units packed in a case.

Color Rendering Index (CRI): An indication of the ability of the lamp to render object colors in a normal, natural way. The higher the number (0-100), the better the color appearance.

OP (Operating Position)

Order Code: It is important to use this five-digit code when ordering to ensure that you receive the exact product you require.

ANSI Ballast Type: Ballast type used to operate lamp.

Initial Lumens: Initial light output.

Additional Information: Typical application and/or other important information.

MOL (in): Maximum Overall Length in inches.

Rated Life (hours): Lamp burning hours to median life expectancy.

Footnotes: See page 3-19.

Base: The type of base.

Description: The lamp's identification code.

Warning and Caution Notices: See page 3-21.

Constant Color CMH® Metal Halide Lamps

Bulb Shape	Base	LET	OP	Watts	MOL (in)	LCL (in)	Order Code	Description	ANSI Ballast Type	Case Qty	CBCP	Rated Life (hrs)	Initial Lumens	Mean Lumens	Color Temp K	CRI	Additional Information	Footnotes	Warning and Caution Notices
CMH® MR16																			
MR16	GX10	O	U	20	2.28		85101	CMH20MR16/830/SP	M156	12	9000	12000	1000		3000	81	12 Spotlight, UV control	33,39,51	107

CMH20MR16 / 830 / SP

- CMH20MR16: Identifies as CMH® lamp. Identifies the lamp's wattage. Identifies the bulb shape.
- 830: Color temp. and CRI.
- SP: Additional information.

WHEN YOU DON'T KNOW THE LAMP DESCRIPTION

1. Identify bulb shape by using illustrations on pages 3-2 to 3-4.
2. Measure bulb diameter using ruler in Appendix section page D-1 to determine width in eighths of an inch.
3. Identify base type using table on page 3-5.
4. Find your lamp in the tabular data containing the bulb shape, size and base, which are all listed by wattage.

Bulb Shape	Base	LET	OP	Watts	MOL (in)	LCL (in)	Order Code	Description	ANSI Ballast Type	Case Qty	CBCP	Rated Life (hrs)	Initial Lumens	Mean Lumens	Color Temp K	CRI	Additional Information	Reduced Watts/ High Color Rendering	Footnotes	Warning and Caution Notices
Constant Color CMH® Metal Halide Lamps																				
CMH® MR16 ULTRA																				
MR16	GX10	O	U	39	2.28		62292	CMH39MR16UL93/SP	C130/ M130	12	16000	16500	2200		3000	90	12 Spotlight, UV Control, Vertical +/-60 degrees; Electronic Ballast		33,39,51	107
		O	U	39	2.28		62293	CMH39MR16UL93/FL	C130/ M130	12	5500	16500	2200		3000	90	25 Spotlight, UV Control, Vertical +/-60 degrees; Electronic Ballast		33,39,51	107
		O	U	39	2.28		62294	CMH39MR16UL93WFL	C130/ M130	12	3000	16500	2200		3000	90	40 Spotlight, UV Control, Vertical +/-60 degrees; Electronic Ballast		33,39,51	107
CMH® MR16																				
MR16	GX10	O	U	20	2.28		85101	CMH20MR16/830/SP	C156/ M156	12	9000	12000	1000		3000	81	12 Spotlight, UV Control		33,39,51	107
		O	U	20	2.28		85110	CMH20MR16/830/FL	C156/ M156	12	2900	12000	1000		3000	81	25 Floodlight, UV Control		33,39,51	107
		O	U	20	2.28		97638	CMH20MR16/830WFL	C156/ M156	12	1500	12000	1000		3000	81	40 Wideflood, UV Control		33,39,51	107
		O	U	39	2.28		71488	CMH39MR16/930/SP	C130/ M130	12	16000	10000	2200		3000	90	12 Spotlight, UV Control		33,39,51	107
		O	U	39	2.28		71489	CMH39MR16/930/FL	C130/ M130	12	5500	10000	2200		3000	90	25 Floodlight, UV Control		33,39,51	107
		O	U	39	2.28		71490	CMH39MR16/930WFL	C130/ M130	12	3000	10000	2200		3000	90	40 Wideflood, UV Control		33,39,51	107
		O	U	39	2.28		71491	CMH39MR16/942/SP	C130/ M130	12	16000	12000	2200		4000	92	12 Spotlight, UV Control		33,39,51	107
		O	U	39	2.28		71492	CMH39MR16/942/FL	C130/ M130	12	5500	12000	2200		4000	92	25 Floodlight, UV Control		33,39,51	107
		O	U	39	2.28		71493	CMH39MR16/942WFL	C130/ M130	12	3000	12000	2200		4000	92	40 Wideflood, UV Control		33,39,51	107
CMH® PAR Integral Ballast																				
PAR38	E26	O	U	23	5.35		76224	CMHi23P38SP/ECO		6	28000	12000	1400		3000	81	10 Spotlight, UV Control		33,39	100
		O	U	23	5.35		76225	CMHi23P38FL/ECO		6	6000	12000	1400		3000	81	25 Floodlight, UV Control		33,39	100
		O	U	23	5.35		76226	CMHi23P38WFL/ECO		6	2800	12000	1400		3000	81	36 Wideflood, UV Control		33,39	100
CMH® PAR																				
PAR20	E26	O	U	20	3.60		29485	CMH20PAR20/SP	C156/ M156	15	13000	12000	1000		3000	81	8 Spotlight, UV Control		33,39,51	107
		O	U	20	3.60		29486	CMH20PAR20/FL	C156/ M156	15	3750	12000	1000		3000	81	25 Floodlight, UV Control		33,39,51	107
PAR30L	E26	O	U	20	4.75		29487	CMH20PAR30/SP10	C156/ M156	6	19800	12000	1200		3000	81	10 Spotlight, UV Control		33,39,51	107
		O	U	20	4.75		29488	CMH20PAR30/SP15	C156/ M156	6	14500	12000	1200		3000	81	15 Spotlight, UV Control		33,39,51	107
		O	U	20	4.75		29489	CMH20PAR30/FL25	C156/ M156	6	4900	12000	1200		3000	81	25 Floodlight, UV Control		33,39,51	107
PAR20	E26	O	U	39	3.60		42068	CMH39UPAR20FL25	C130/ M130	15	7500	10000	2100		3000	86	25 Floodlight, UV Control		33,39,45	107
		O	U	39	3.60		42069	CMH39UPAR20SP10	C130/ M130	15	22000	10000	2100		3000	86	10 Spotlight, UV Control		33,39,45	107
		O	U	39	3.60		96526	CMH39PAR20/NSP4K	C130/ M130	15	19450	10000	1950		4200	90	10 Spotlight, UV Control		33,39,45	107
		O	U	39	3.60		96527	CMH39PAR20/FL4K	C130/ M130	15	6950	10000	1950		4200	90	25 Floodlight, UV Control		33,39,45	107
PAR30L	E26	O	U	39	4.75		42066	CMH39PAR30L/SP15	C130/ M130	6	29000	10000	2400		3000	81	15 Spotlight, UV Control		33,39,45	107
		O	U	39	4.75		42067	CMH39PAR30L/FL25	C130/ M130	6	11000	10000	2400		3000	81	25 Floodlight, UV Control		33,39,45	107
		O	U	39	4.75		45066	CMH39/PAR30LSP10	C130/ M130	6	39600	10000	2400		3000	81	10 Spotlight, UV Control		33,39,45	107
		O	U	39	4.75		96528	CMH39PAR30LNSP4K	C130/ M130	6	36700	10000	2225		4200	89	10 Spotlight, UV Control		33,39,45	107
		O	U	39	4.75		96529	CMH39PAR30L/SP4K	C130/ M130	6	26900	10000	2225		4200	89	15 Spotlight, UV Control		33,39,45	107
		O	U	39	4.75		96530	CMH39PAR30L/FL4K	C130/ M130	6	10200	10000	2225		4200	89	25 Floodlight, UV Control		33,39,45	107
		O	U	70	4.75		22152	CMH70PAR30L830SP	C139/ M98	6	43000	13000	4700		3000	82	15 Spotlight, UV Control		33,39,45	107
		O	U	70	4.75		22159	CMH70PAR30L830FL	C139/ M98	6	10000	13000	4700		3000	82	40 Floodlight, UV Control		33,39,45	107

For the most up-to-date product information, see www.gelighting.com. To convert inches to millimeters, multiply by 25.4.
All footnotes, warning and caution notices found at the end of this section (page 3-19).

Bulb Shape	Base	LET	OP	Watts	MOL (in)	LCL (in)	Order Code	Description	ANSI Ballast Type	Case Qty	CBCP	Rated Life (hrs)	Initial Lumens	Mean Lumens	Color Temp K	CRI	Additional Information	Reduced Watts/ High Color Rendering	Footnotes	Warning and Caution Notices
Constant Color CMH® Metal Halide Lamps (continued)																				
CMH® PAR (continued)																				
PAR38	E26	O	U	70	5.31		45675	CMH70PAR38SP/ECO	C98/ M139/ M143/	6	40000	10000	4800		3000	82	15 Spotlight, UV Control		33,39	108
		O	U	70	5.31		45677	CMH70PAR38FL/ECO	C98/ M139/ M143/	6	14000	10000	4800		3000	82	25 Floodlight, UV Control		33,39	108
		O	U	70	5.31		45679	CMH70PAR38WF/ECO	C98/ M139/ M143/	6	4400	10000	4800		3000	82	60 Wide Floodlight, UV Control		33,39	108
		O	U	100	5.31		45680	CMH100PAR38SPECO	C90/ M90/ M140	6	45000	10000	6500		3000	81	15 Spotlight, UV Control		33,39	108
		O	U	100	5.31		45681	CMH100PAR38FLECO	C90/ M90/ M140	6	15000	10000	6500		3000	81	25 Floodlight, UV Control		33,39	108
		O	U	100	5.31		45682	CMH100PAR38WFECO	C90/ M90/ M140	6	5500	10000	6500		3000	81	60 Wide Floodlight, UV Control		33,39	108
CMH® Elliptical																				
BD17	E26	E	U	70	5.43	3.37	22119	CMH70/U/830/MED	M139/ M98/ C98	6		15000	6300	4100	3000	80	Clear		33	116
		E	U	70	5.43	3.37	22124	CMH70/C/U/830MED	M139/ M98/ C98	6		15000	6000	4000	3000	80	Coated		33	116
		E	U	100	5.43	3.37	22127	CMH100/U/830/MED	C90/ M90/ M140	6		10000 V 15000 H	9200	6600 V 6400 H	3000	83	Clear		33	116
		E	U	100	5.43	3.37	22137	CMH100/C/U830MED	C90/ M90/ M140	6		10000 V 15000 H	8700	6300	3000	83	Coated		33	116
CMH® Elliptical Open-Rated																				
ED17	E26	O	U	70	5.43	3.37	31069	CMH70U830MED/O	M143/ M98/ C98	6		15000	5700	4100	3000	80	Clear		33	106
		O	U	70	5.43	3.37	31070	CMH70CU830MED/O	M143/ M98/ C98	6		15000	5700	4100	3000	80	Coated		33	106
		O	U	70	5.43	3.37	31073	CMH70U942MED/O	M143/ M98/ C98	6		15000	5500	4200	4000	90	Clear		33	106
		O	U	70	5.43	3.37	31074	CMH70CU942MED/O	M143/ M98/ C98	6		15000	5200	4000	4000	90	Coated		33	106
	E26	O	U	150	5.43	3.37	31065	CMH150U830MED/O	C102/ M102/ M142	6		12000	12900	9500	3000	80	Clear		33	106
		O	U	150	5.43	3.37	31066	CMH150CU830MED/O	C102/ M102/ M142	6		12000	11900	8800	3000	80	Coated		33	106
		O	U	150	5.43	3.37	31067	CMH150U942MED/O	C102/ M102/ M142	6		15000	12000	9000	4200	90	Clear		33	106
		O	U	150	5.43	3.37	31068	CMH150CU942MED/O	C102/ M102/ M142	6		15000	11000	8300	4200	90	Coated		33	106
CMH® Single-Ended G12 ULTRA																				
T6	G12	E	U	39	3.56	2.18	79399	CMH39/930G12ULR	C130/ M130	12		16500	3600	3060	3000	87	UV Control, Vertical +/-60 degrees; Electronic Ballast		33,39,51	104
		E	U	70	3.56	2.18	73056	CMH70U930G12ULR	C139/ M139	12		18000	6400	5300	3000	87	UV Control		33,39,45	104

For the most up-to-date product information, see www.gelighting.com. To convert inches to millimeters, multiply by 25.4.
All footnotes, warning and caution notices found at the end of this section (page 3-19).

Bulb Shape	Base	LET	OP	Watts	MOL (in)	LCL (in)	Order Code	Description	ANSI Ballast Type	Case Qty	CBCP	Rated Life (hrs)	Initial Lumens	Mean Lumens	Color Temp K	CRI	Additional Information	Reduced Watts/ High Color Rendering	Footnotes	Warning and Caution Notices
Constant Color CMH® Metal Halide Lamps (continued)																				
CMH® Single-Ended G12																				
T4.5	G12	E	U	20	3.56	2.18	29703	CMH20T/U/830/G12	C156/ M156	12		12000	1600	1200	3000	81	UV Control		33,39,51	104
		E	U	39	3.56	2.18	20153	CMH39TUVCU830G12	C130/ M130	12		16500	3400	2300	3000	84	UV Control		33,39,45, 53	104
		E	U	39	3.56	2.18	29696	CMH39T/U/942/G12	C130/ M130	12		18000	3200	2600	4200	88	UV Control		33,39,45, 53	104
T6	G12	E	U	70	3.56	2.18	20016	CMH70TU/830/G12	C139/ M139	12		15000	6200	4700	3000	83	UV Control		33,39,45	104
		E	U	70	3.56	2.18	20023	CMH70TU/942/G12	C139/ M139	12		15000	6300	4700	4200	91	UV Control		33,39,45	104
		E	U	150	3.93	2.18	20017	CMH150TU/830/G12	C142/ M102	12		12000	14000	11000	3000	82	UV Control		33,39,45	104
		E	U	150	3.93	2.18	20018	CMH150TU/942/G12	C142/ M102	12		12000	13000	11000	4200	94	UV Control		33,39,45	104
CMH® Double-Ended TD																				
T6	Rx7s	E	H45	70	4.50	2.25	92587	CMH70/TD/830RX7S	M85/ M139	12		15000	7000	5600	3000	81	UV Control		33,39	109
		E	H45	70	4.50	2.25	92588	CMH70/TD/942RX7S	M85/ M139	12		15000	7000	5600	4200	88	UV Control		33,39	109
T7	Rx7s	E	H45	150	5.37	2.62	92589	CMH150TD830RX7S	M81/ M142	12		15000	14000	11500	3000	80	UV Control		33,39	109
		E	H45	150	5.37	2.62	92590	CMH150TD942RX7S	M81/ M142	12		15000	14000	11500	4200	93	UV Control		33,39	109
CMH® GU6.5 ULTRA																				
T4	GU6.5	E	U	39	2.05	1.18	62291	CMH39ULR930GU6.5	C130/ M130	12		16500	3500	2835	3000	87	UV Control, Vertical +/-60 degrees; Electronic Ballast		33,39,51	104
CMH® GU6.5																				
T4	GU6.5	E	U	20	2.05	1.18	85086	CMH20T/U830GU6.5	C156/ M156	12		12000	1615	1066	3000	81	UV Control		33,39,51	104
		E	U	39	2.05	1.18	71484	CMH39T/U930GU6.5	C130/ M130	12		10000	3400	2300	3000	88	UV Control		33,39,51	104
		E	U	39	2.05	1.18	71487	CMH39T/U942GU6.5	C130/ M130	12		12000	3400	2600	4000	90	UV Control		33,39,51	104
CMH® Mini ULTRA																				
T4.5	G8.5	E	U	39	3.37	2	79400	CMH39/930G8.5ULR	C130/ M130	12		16500	3600	3060	3000	87	UV Control, Vertical +/-60 degrees; Electronic Ballast		33,39,51	104
		E	U	70	3.37	2.00	73057	CMH70U930G8.5ULR	C139/ M139	12		18000	6200	5140	3000	88	UV Control		33,39,45	104
CMH® Mini's																				
T4.5	G8.5	E	U	20	3.37	2.00	92696	CMH20TCU830/G8.5	C156/ M156	12		12000	1650	1090	3000	81	UV Control		33,39,51	104
		E	U	39	3.37	2.00	90352	CMH39TCU830/G8.5	C130/ M130	12		16500	3400	2300	3000	84	UV Control		33,39,45, 53	104
		E	U	39	3.37	2.00	29698	CMH39TCU942/G8.5	C130/ M130	12		18000	3200	2600	4200	88	UV Control		33,39,45, 53	104
		E	U	70	3.37	2.00	92585	CMH70TCU830G8.5	C139/ M139	12		15000	6200	4400	3000	83	UV Control		33,39,45	104
		E	U	70	3.37	2.00	29701	CMH70TCU942/G8.5	C139/ M139	12		15000	6200	4600	4200	90	UV Control		33,39,45	104
CMH® Chromafit™																				
T15	E39	E	U	250	9.75	5.75	93357	CMH250/U/830/R	S50/ M168	12		24000	25000	20000	3000	85			33	105
ED18	E39	E	U	400	9.75	5.75	93295	CMH400/U/830/R	S51/ M169	12		20000	41000	31300	3000H 3600V	82H 80V			33,45,49	105
High-Watt CMH® SPXX																				
ED28	EX39	O	V	250	8.31	5.00	48429	CMH250/V/PA/O		12		20000	23000	18400	4100	90	Clear		33,45,52	106
		O	V	250	8.31	5.00	48432	CMH250C/V/PA/O		12		20000	22000	17600	4100	90	Coated		33,45,52	106
ED37	EX39	O	V	320	11.31	7.00	17264	CMH320/V/PA/O		6		20000	31000	24800	4100	90	Clear		33,45,52	106
		O	V	320	11.31	7.00	17267	CMH320C/V/PA/O		6		20000	30000	24000	4100	90	Coated		33,45,52	106
		O	V	350	11.31	7.00	20035	CMH350/V/PA/O		6		20000	33000	26400	4000	90	Clear		33,45,52	106
		O	V	350	11.31	7.00	20036	CMH350C/V/PA/O		6		20000	32000	25600	4000	90	Coated		33,45,52	106
		O	V	400	11.31	7	17259	CMH400/V/PA/O		6		20000	37000	29600	4200	90	Clear		33,45,52	106
		O	V	400	11.31	7	17260	CMH400/C/V/PA/O		6		20000	36000	28800	4200	90	Coated		33,45,52	106

For the most up-to-date product information, see www.gelighting.com. To convert inches to millimeters, multiply by 25.4.
All footnotes, warning and caution notices found at the end of this section (page 3-19).

High Intensity Discharge Lamps

Bulb Shape	Base	LET	OP	Watts	MOL (in)	LCL (in)	Order Code	Description	ANSI Ballast Type	Case Qty	CBCP	Rated Life (hrs)	Initial Lumens	Mean Lumens	Color Temp K	CRI	Additional Information	Reduced Watts/ High Color Rendering	Footnotes	Warning and Caution Notices
PulseArc® Multi-Vapor® Metal Halide Lamps																				
50 Watts																				
BD17	E26	E	U	50	5.43	3.43	10361	MXR50/U/MED	M110	6		10000	3200	2100	3700	60	Clear			118
		E	U	50	5.43	3.43	10364	MXR50/C/U/MED	M110	6		10000	3000	2000	3400	65	Coated			118
70 Watts																				
BD17	E26	E	U	70	5.43	3.43	22158	MXR70/U/MED	M98	6		12000	5500	3500	3500	55	Clear			118
		E	U	70	5.43	3.43	22162	MXR70/C/U/MED	M98	6		12000	5300	3300	3200	55	Coated			118
		E	U	70	5.43	3.43	12590	MVR70/U/MED	M98	6		12000	5500	3000	4000	65	Clear			118
		E	U	70	5.43	3.43	12594	MVR70/C/U/MED	M98	6		12000	5250	2800	4000	65	Coated			118
100 Watts																				
BD17	E26	E	U	100	5.43	3.43	18680	MXR100/U/MED	M90	6		15000	9000	6200	3200	65	Clear			118
		E	U	100	5.43	3.43	18679	MXR100/C/U/MED	M90	6		15000	8500	5900	3200	65	Coated			118
		E	U	100	5.43	3.43	12652	MVR100/U/MED	M90	6		15000	9500	5800	4000	70	Clear			118
		E	U	100	5.43	3.43	12653	MVR100/C/U/MED	M90	6		15000	8800	4900	4000	70	Coated			118
150 Watts																				
BD17	E26	E	U	150	5.43	3.43	22935	MXR150/U/MED	M102	6		15000	13300	10000	3400	60	Clear			118
		E	U	150	5.43	3.43	22936	MXR150/C/U/MED	M102	6		15000	12600	9500	3100	60	Coated			118
		E	U	150	5.43	3.43	12598	MVR150/U/MED	M102	6		15000	14000	10500	4300	65	Clear			118
		E	U	150	5.43	3.43	12604	MVR150/C/U/MED	M102	6		15000	13300	10000	3900	70	Coated			118
175 Watts																				
ED23.5	E39	E	VBU	175	7.50	5.00	11185	MXR175/C/VBU/PA	M137/ M152	6		15000	16000	12000	3200	65	Coated		43	117
		E	VBU	175	7.50	5.00	12622	MVR175/VBU/PA	M137/ M152	6		15000	17500	13000	4000	70	Clear		43	117
		E	VBU	175	7.50	5.00	12633	MVR175/C/VBU/PA	M137/ M152	6		15000	16500	12500	4000	70	Coated		43	117
BD17	E26	E	VBU	175	5.75	3.43	12636	MVR175/VBU/MEDPA	M137/ M152	6		15000	17500	13000	4000	70	Clear		43	117
		E	VBU	175	5.75	3.43	12637	MVR175/CVBUMEDPA	M137/ M152	6		15000	16500	12500	4000	70	Coated		43	117
250 Watts																				
ED28	E39	E	U	250	8.25	5.00	78665	MVR250/U/PA	M138/ M153	12		12000H/ 15000V	18600H/ 22400V	12000H/ 14000V	3900	60	Clear		43	116
		E	VBU	250	8.25	5.00	26317	MVR250/VBU/PA	M138/ M153	12		15000	23000	17000	4200	55	Clear		43	116
		E	VBU	250	8.25	5.00	26319	MVR250/C/VBU/PA	M138/ M153	12		15000	21500	15500	3900	55	Coated		43	116
		E	HOR	250	8.25	5.00	72882	MVR250/HOR/PA	M138/ M153	12		12000	20000	13700	4400	60	Clear		43	117
320 Watts																				
ED28	E39	E	VBU	320	8.25	5.00	27501	MVR320/VBU/HO/PA	M132/ M154	12		20000	31000	18000	4000	60	Clear		43	117
		E	VBU	320	8.25	5.00	27502	MVR320/C/VBUHOPA	M132/ M154	12		20000	30000	16500	3700	60	Coated		43	117
		E	VBU	320	8.25	5.00	45666	MVR320VBU/XHO/PA	M132/ M154	12		20000	34000	25000	4000	65	Extra High Output		43	116
		E	VBU	320	8.25	5.00	45669	MVR320/C/VBU/ XHO/PA	M132/ M154	12		20000	33000	23000	3700	70	Extra High Output		43	116
		E	HOR	320	8.25	5.00	72884	MVR320/HOR/PA	M132/ M154	12		20000	30000	19100	4100	65	Clear		43	117
350 Watts																				
ED37	E39	E	VBU	350	11.50	7.00	23729	MVR350VBUXHOPA/E	M131	6		20000	36500	27000	4000	60	Extra High Output		43	117
		E	VBU	350	11.50	7.00	23738	MVR350CVBUXHOPAE	M131	6		20000	34500	25000	3700	60	Extra High Output		43	117
400 Watts																				
ED37	E39	E	U	400	11.50	7.00	78666	MVR400/U/PA	M135/ M155	6		15000H/ 20000V	31200H/ 39400V	18000H/ 22000V	4000	60	Clear		43	116
		S	VBU	400	11.50	7.00	45664	MVR400/VBU/HO/PA	M135/ M155	6		20000	41000	31000	4000	60	Clear		49	121
		S	VBU	400	11.50	7.00	12642	MVR400/VBU/XHOPA	M135/ M155	6		20000	44000	33000	4000	55	Extra High Output		49	121
		S	VBU	400	11.50	7.00	12644	MVR400/CVBUXHOPA	M135/ M155	6		20000	42000	31500	3700	55	Coated, Extra High Output		49	121
		E	HOR	400	11.50	7.00	72886	MVR400/HOR/PA	M135/ M155	6		20000	40000	22300	4100	65	Clear		43,49	117
		E	VBD	400	11.50	7.00	46632	MVR400VBD/XHO/PA	M135/ M155	6		20000	44000	35200	4000	65	Extra High Output		43,49	116

For the most up-to-date product information, see www.gelighting.com. To convert inches to millimeters, multiply by 25.4.
All footnotes, warning and caution notices found at the end of this section (page 3-19).

Bulb Shape	Base	LET	OP	Watts	MOL (in)	LCL (in)	Order Code	Description	ANSI Ballast Type	Case Qty	CBCP	Rated Life (hrs)	Initial Lumens	Mean Lumens	Color Temp K	CRI	Additional Information	Reduced Watts/ High Color Rendering	Footnotes	Warning and Caution Notices
PulseArc® Multi-Vapor® Metal Halide Lamps (continued)																				
ED28	E39	E	VBU	400	8.25	5.00	46271	MVR400/VBUED28PA	M135/ M155	12		20000	44000	28500	4000	65	Clear		43,49	116
		E	VBU	400	8.25	5.00	46272	MVR400CVBUED28PA	M135/ M155	12		20000	42000	27500	3700	70	Coated Compact		43,49	116
		E	HOR	400	8.25	5.00	72885	MVR400/HOR/ ED28/PA	M135/ M155	12		20000	38000	21400	4100	65	Clear Compact		43,49	117
750 Watts																				
BT37	E39	E	VBU	750	11.50	7.00	27219	MVR750/VBU/PA	M149	6		16000	82000	60000	4000	65	Clear		49	117
		E	VBU	750	11.50	7.00	45560	MVR750/C/VBU/PA	M149	6		16000	72000	54000	3700	70	Coated		49	117
1000 Watts																				
BT37	E39	E	U	1000	11.50	7.00	10389	MVR1000U/BT37/PA	M141	6		9000H/ 12000V	105000H/ 115000V	82000H/ 90000V	3900	65	Clear		43,49	116
Multi-Vapor® Metal Halide Lamps																				
150 Watts																				
ED28	E39	E	U	150	8.25	5.00	13481	MVR150/U/WM	M57/ M107	12		7500H/ 10000V	11500H/ 13500V	7200H/ 8500V	4000	65	Clear, Watt-Miser®	✓		117
		E	U	150	8.25	5.00	13490	MVR150/C/U/WM	M57/ M107	12		7500H/ 10000V	10900H/ 12800V	6900H/ 8000V	3700	70	Coated, Watt-Miser®	✓		117
175 Watts																				
BD17	E26	E	U	175	5.75	3.43	18902	MVR175/U/MED	M57	6		6000H/ 10000V	11700H/ 14000V	7400H/ 8800V	4000	60	Clear			117
		E	U	175	5.75	3.43	26432	MVR175/U/MED/CP	M57	4		6000H/ 10000V	11700H/ 13600V	7400H/ 8800V	4000	65	Clear, Consumer Pack			117
		E	U	175	5.75	3.43	19976	MVR175/C/U/MED	M57	6		6000H/ 10000V	11900H/ 12900V	7900H/ 8400V	3900	60	Coated			117
ED28	E39	E	U	175	8.25	5.00	47760	MVR175/U	M57	12		6000H/ 10000V	11700H/ 13600V	7900H/ 8800V	4000	55	Clear			117
		E	U	175	8.25	5.00	26433	MVR175/U/CP	M57	4		6000H/ 10000V	11700H/ 13600V	7900H/ 8800V	4000	65	Clear, Consumer Pack			117
		E	U	175	8.25	5.00	47761	MVR175/C/U	M57	12		6000H/ 10000V	11900H/ 12900V	7900H/ 8400V	3900	55	Coated			117
		E	U	175	8.25	5.00	17634	MVR175/SP30/U	M57	12		6000H/ 10000V	10300H/ 12000V	6500H/ 7600V	3000	70	RE730 Phosphor Coating			117
PAR38	E26	E	U	175	5.62		25218	MVR175/PAR38/FL1	M57	6	6500	7500	12000		3800	65	Clear, One-Piece PAR			117
250 Watts																				
ED28	E39	E	U	250	8.25	5.00	42729	MVR250/U	M58	12		6000H/ 10000V	19100H/ 20800V	12400H/ 13500V	4200	60	Clear			117
		E	U	250	8.25	5.00	26434	MVR250/U/CP	M58	4		6000H/ 10000V	19100H/ 20800V	12400H/ 13500V	4200	65	Clear, Consumer Pack			117
		E	U	250	8.25	5.00	42731	MVR250/C/U	M58	12		6000H/ 10000V	18200H/ 19800V	11600H/ 13000V	3900	60	Coated			117
		E	U	250	8.25	5.00	17633	MVR250/SP30/U	M58	12		6000H/ 10000V	16600H/ 18000V	10600H/ 11500V	3000	70	RE730 Phosphor Coating			117
360 Watts																				
ED37	E39	S	U	360	11.50	7.00	13495	MVR360/U/WM/HO	M59/ M165	6		20000	36000	20000	4300	60	Clear, Watt-Miser®	✓	32,49	121
400 Watts																				
ED37	E39	S	U	400	11.50	7.00	43828	MVR400/U	M59	6		15000H/ 20000V	33100H/ 38000V	22100H/ 23500V	4000	60	Clear		49	121
		S	U	400	11.50	7.00	26435	MVR400/U/CP	M59	4		15000H/ 20000V	33100H/ 36000V	22100H/ 23500V	4000	65	Clear, Consumer Pack		49	121
		S	U	400	11.50	7.00	43829	MVR400/C/U	M59	6		15000H/ 20000V	32200H/ 36000V	19300H/ 23000V	3700	60	Coated		49	121
		S	U	400	11.50	7.00	17632	MVR400/SP30/U	M59	6		15000H/ 20000V	28500H/ 31000V	17100H/ 18600V	3000	70	RE730 Phosphor Coating		49	121
ED28	E39	E	U	400	8.25	5.00	18904	MVR400/U/ED28	M59	12		15000H/ 20000V	33100H/ 38000V	22100H/ 23500V	4000	60	Clear, Compact		49	117
		E	U	400	8.25	5.00	19979	MVR400/C/U/ED28	M59	12		15000H/ 20000V	32200H/ 36000V	19300H/ 23000V	4000	60	Coated, Compact		49	117
1000 Watts																				
BT56	E39	S	U	1000	15.37	9.50	41826	MVR1000/U	M47	6		11000H/ 15000V	100280H/ 108000V	79000H/ 86000V	4000	65	Clear		49	121
		S	U	1000	15.37	9.50	41827	MVR1000/C/U	M47	6		11000H/ 15000V	96600H/ 105000V	73000H/ 80000V	3700	65	Coated		49	121
BT37	E39	E	U	1000	11.50	7.00	18205	MVR1000/U/BT37	M47	6		9000H/ 12000V	105000H/ 115000V	82000H/ 90000V	3700	65	Clear, Compact		49	121
High Output and XHO Multi-Vapor® Metal Halide Lamps																				
175 Watts																				
ED28	PosMog	E	HOR	175	8.25	5.00	18105	MVR175/C/HOR	M57	12		10000	14100	7500	3500	70	Coated, Position Oriented Socket			117

For the most up-to-date product information, see www.gelighting.com. To convert inches to millimeters, multiply by 25.4.
All footnotes, warning and caution notices found at the end of this section (page 3-19).

High Intensity Discharge Lamps

Bulb Shape	Base	LET	OP	Watts	MOL (in)	LCL (in)	Order Code	Description	ANSI Ballast Type	Case Qty	CBCP	Rated Life (hrs)	Initial Lumens	Mean Lumens	Color Temp K	CRI	Additional Information	Reduced Watts/ High Color Rendering	Footnotes	Warning and Caution Notices
High Output and XHO Multi-Vapor® Metal Halide Lamps (continued)																				
250 Watts																				
ED28	PosMog	E	HOR	250	8.25	5.00	18101	MVR250/HOR	M58	12		15000	21000	10000	4200	65	Clear, Position Oriented Socket			117
		E	HOR	250	8.25	5.00	18103	MVR250/C/HOR	M58	12		15000	19700	9400	4000	65	Coated, Position Oriented Socket			117
360 Watts - Watt-Miser® Energy-Saving Replacement for 400W Metal Halide																				
ED37	E39	S	VBU	360	11.50	7.00	40053	MVR360VBU/WM/ XHO	M59	6		20000	37000	24000	4200	60	Extra High Output	✦	32,49	121
		S	VBU	360	11.50	7.00	40055	MVR360C/ VBUWMXHO	M59	6		20000	35000	23000	4000	60	Extra High Output	✦	32,49	121
400 Watts																				
ED37	E39	S	VBU	400	11.50	7.00	49657	MVR400/VBU/HO	M59	6		20000	41000	26500	4000	60	High Output		49	121
		S	VBU	400	11.50	7.00	20931	MVR400SP30VBU/HO	M59	6		20000	34000	20400	3200	70	RE730 Phosphor Coating		49	121
		S	VBU	400	11.50	7.00	13923	MVR400/VBU/XHO	M59	6		20000	43000	28000	4000	55	Extra High Output		49	121
		S	VBU	400	11.50	7.00	13924	MVR400/C/VBU/XHO	M59	6		20000	42000	27000	3700	55	Extra High Output		49	121
ED28	E39	E	VBU	400	8.31	5.00	40335	MVR400/VBUED28HO	M59	12		20000	41000	26500	4000	60	Clear, Compact		49	121
BT28	E39	E	HOR	400	8.25	5.00	40201	MVR400/HOR/BT28	M59	12		20000	37000	22000	4200	65	Compact, Horizontal		49	117
BT37	E39	E	HOR	400	11.50	7.00	26218	MVR400/HOR/MOG	M59	6		20000	38000	22500	4200	65	Clear		49	117
		E	HOR	400	11.50	7.00	26219	MVR400/C/HOR/MOG	M59	6		20000	36800	22000	3900	70	Coated		49	117
1000 Watts																				
BT56	E39	S	VBU	1000	15.37	9.50	44835	MVR1000/VBU/HO	M47	6		15000	111000	87000	3800	65	Clear		49	121
Sports Lighting																				
1000 Watts																				
PAR64	G38	E	U	1000	6.87		88514	SPL1000/PAR64840	HID	1	1,350,000	3500	63000		4000	80	Clear, Narrow Spot		38	124
		E	U	1000	6.87		88513	SPL1000/PAR64/HR	HID	1	1,350,000	3500	63000		4000	80	Clear, Narrow Spot		38	124
1500 Watts																				
T7	Rx7s	E	H	1500	10.12	5.00	16920	SPL1500/H/652	HID	1		6000	120000	90000	5200	65	Frosted		38	125
BT56	E39	E	U	1500	15.37	9.50	47326	MVR1500/U/SPORTS	M48	6		3000	162000H/ 170000V	137000H/ 153000V	4000	65	Clear		17,42,49	117
1650 Watts																				
BT56	PosMog	E	HOR	1650	15.37	9.50	25532	MVR1650/HOR	M112	6		3000	177000	145000	3200	65	Clear, Position Oriented Socket		17,49	117
Protected Multi-Vapor® Metal Halide Lamps																				
50 Watts																				
ED17	E26	O	U	50	5.43	3.43	45670	MXR50/U/MED/O	M110	6		10000	3200	1700	3500	70	Clear, Protected			120
		O	U	50	5.43	3.43	45671	MXR50/C/U/MED/O	M110	6		10000	3200	1500	3500	70	Coated, Protected			120
70 Watts																				
ED17	E26	O	U	70	5.43	3.43	12377	MXR70/U/MED/O	M98	6		15000	5500	3500	3200	70	Clear, Protected			120
		O	U	70	5.43	3.43	12577	MXR70/C/U/MED/O	M98	6		15000	4900	3300	3200	70	Coated, Protected			120
100 Watts																				
ED17	E26	O	U	100	5.43	3.43	12381	MXR100/U/MED/O	M90	6		15000	9000	6200	3200	70	Clear, Protected			120
		O	U	100	5.43	3.43	12579	MXR100/C/U/MED/O	M90	6		15000	8500	5900	3200	70	Coated, Protected			120
150 Watts																				
ED17	E26	O	U	150	5.43	3.43	45683	MXR150/U/MED/O	M102	6		15000	12500	8600	3500	70	Clear, Protected			120
		O	U	150	5.43	3.43	45688	MXR150/C/U/MED/O	M102	6		15000	12000	8300	3500	70	Coated, Protected			120
175 Watts																				
ED28	EX39	O	VBU	175	8.25	5.00	49470	MPR175/VBU/O	M57	6		10000	15700	8400	4000	65	Clear, Protected, UV Control			119
		O	VBU	175	8.25	5.00	11649	MPR175/C/VBU/O	M57	6		10000	14300	7700	3800	70	Coated, Protected, UV Control			119
		O	VBU	175	8.25	5.00	61325	MPR175/VBU/PA/O	M137, M152	6		15000	16000	11000	3900	65	Clear, Protected, UV Control			120
250 Watts																				
ED28	EX39	O	VBU	250	8.25	5.00	49471	MPR250/VBU/O	M58	6		10000	21300	14200	4000	65	Clear, Protected, UV Control			119
		O	VBU	250	8.25	5.00	11650	MPR250/C/VBU/O	M58	6		10000	19500	12900	3800	70	Coated, Protected, UV Control			119
		O	VBU	250	8.25	5.00	61326	MPR250/VBU/PA/O	M138, M153	6		15000	23000	16600	3800	75	Clear, Protected, UV Control			120

For the most up-to-date product information, see www.gelighting.com. To convert inches to millimeters, multiply by 25.4.
All footnotes, warning and caution notices found at the end of this section (page 3-19).

Bulb Shape	Base	LET	OP	Watts	MOL (in)	LCL (in)	Order Code	Description	ANSI Ballast Type	Case Qty	CBCP	Rated Life (hrs)	Initial Lumens	Mean Lumens	Color Temp K	CRI	Additional Information	Reduced Watts/ High Color Rendering	Footnotes	Warning and Caution Notices
Protected Multi-Vapor® Metal Halide Lamps (continued)																				
320 Watts																				
ED37	EX39	O	VBU	320	11.50	7.00	46275	MPR320/VBU/XHOPA	M132/ M154	6		20000	32000	22500	4000	65	Clear, Protected, UV Control, Extra High Output			120
		O	VBU	320	11.50	7.00	46276	MPR320C/VBUXHOPA	M132/ M154	6		20000	30500	21500	3700	70	Coated, Protected, UV Control, Extra High Output			120
ED28	EX39	O	VBU	320	8.25	5.00	19609	MPR320/C/PA/ED28	M132/ M154	12		20000	30600	22500	3700	70	Coated, Protected, UV Control		43	120
350 Watts																				
ED37	EX39	O	VBU	350	11.50	7.00	10202	MPR350/VBU/PA	M131	6		20000	35200	24600	3700	65	Clear, Protected, UV Control		43	120
		O	VBU	350	11.50	7.00	48824	MPR350/C/VBU/PA	M131	6		20000	33400	26500	3700	70	Coated, Protected, UV Control		43	120
		O	VBU	350	11.50	7.00	48825	MPR350C/VBU3K/PA	M131	6		20000	33400	23500	3200	70	Coated, Protected, UV Control		43	120
360 Watts - Watt-Miser® Energy-Saving Replacement for 400W Metal Halide																				
ED37	EX39	O	VBU	360	11.50	7.00	40056	MPR360VBUWM/ HO/O	M59/ M165	6		20000	36000	23500	4000	60	Clear, Protected		32,49	119
		O	VBU	360	11.50	7.00	11685	MPR360CVBUWMHO/ O	M59/ M165	6		20000	35000	22500	3700	60	Coated, Protected		32,49	119
400 Watts																				
ED37	EX39	O	VBU	400	11.50	7.00	18708	MPR400/VBU/HO/O	M59	6		20000	40000	26000	3400	65	Clear, Protected		49	119
		O	VBU	400	11.50	7.00	13582	MPR400C/VBU/HO/O	M59	6		20000	38000	25000	3200	65	Coated, Protected		49	119
		O	VBU	400	11.50	7.00	46273	MPR400/VBU/XHOPA	M135/ M155	6		20000	42000	29500	4000	65	Clear, Protected, UV Control, Extra High Output		43,49	120
		O	VBU	400	11.50	7.00	46274	MPR400C/VBUXHOPA	M135/ M155	6		20000	40000	28000	3700	70	Coated, Protected, UV Control, Extra High Output		43,49	120
1000 Watts																				
BT56	EX39	O	VBU	1000	15.37	9.50	41433	MPR1000/VBU/HO/O	M47	6		12000	110000	88500	3500	65	Clear, Protected		49	119
Chromafit™ Multi-Vapor® Metal Halide Lamps (HPS Retrofit Lamps)																				
250 Watts																				
ED28	E39	E	VBU	250	8.25	5.75	12762	MVR250/VBU/R	S50	12		10000	18500	13900	4500	65	Clear, HPS Retrofit		50	116
		E	VBU	250	8.25	5.75	12769	MVR250/C/VBU/R	S50	12		10000	18000	13000	4000	70	Coated, HPS Retrofit		50	116
400 Watts																				
ED28	E39	E	U	400	8.31	5.00	26851	MVR400/U/ED28/R	S51	12		15000H/ 20000V	33100H/ 36000V	20200H/ 22000V	4000	65	Clear, Compact, HPS Retrofit,		49,50	116
ED37	E39	S	VBU	400	11.50	5.75	12770	MVR400/VBU/R	S51	6		20000	37600	22600	4500	65	Clear, HPS Retrofit		49,50	122
		S	VBU	400	11.50	5.75	12772	MVR400/C/VBU/R	S51	6		20000	35700	21400	4000	70	Coated, HPS Retrofit		49,50	122
Lucalox® High Pressure Sodium Lamps																				
150 Watts																				
ED28	E39	O	U	150	8.31	5.00	44243	LU150/100(ED28)	S56	12		24000+	15000	13500	2000	22	Clear, 100V			111
600 Watts																				
T15	E39	O	U	600	11.06	6.62	27187	LU600/T	S106	12		24000	90000	81000	2000	22	Clear			111
750 Watts																				
ED37	E39	O	U	750	11.50	6.75	14682	LU750	S111	6		24000+	110000	99000	2100	22	Clear			111
Ecolux® High Pressure Sodium Lamps (TCLP Compliant)																				
35 Watts																				
B17	E26	O	U	35	5.43	3.43	11668	LU35/MED/ECO	S76	6		16000	2250	2025	1900	22	TCLP Compliant			111
		O	U	35	5.43	3.43	26420	LU35/MED/CP	S76	4		16000	2250	2025	1900	22	TCLP Compliant, Consumer Pack			111
50 Watts																				
B17	E26	O	U	50	5.43	3.43	11345	LU50/MED/ECO	S68	6		24000+	4000	3600	1900	22	TCLP Compliant			111
		O	U	50	5.43	3.43	26421	LU50/MED/CP	S68	4		24000+	4000	3600	1900	22	TCLP Compliant, Consumer Pack			111
B17	E26	O	U	50	5.43	3.43	11347	LU50/D/MED/ECO	S68	6		24000+	3800	3420	1900	22	TCLP Compliant, Diffuse			111
ED23.5	E39	O	U	50	7.75	5.00	44975	LU50/H/ECO	S68	12		24000+	4000	3600	1900	22	TCLP Compliant			111
		O	U	50	7.75	5.00	45006	LU50/D/H/E/CO	S68	12		24000+	3800	3420	1900	22	TCLP Compliant, Diffuse			111

High Intensity Discharge Lamps

Bulb Shape	Base	LET	OP	Watts	MOL (in)	LCL (in)	Order Code	Description	ANSI Ballast Type	Case Qty	CBCP	Rated Life (hrs)	Initial Lumens	Mean Lumens	Color Temp K	CRI	Additional Information	Reduced Watts/ High Color Rendering	Footnotes	Warning and Caution Notices
Ecolux® High Pressure Sodium Lamps (TCLP Compliant) (continued)																				
70 Watts																				
B17	E26	O	U	70	5.43	3.43	11339	LU70/MED/ECO	S62	6		24000+	6400	5450	1900	22	TCLP Compliant			111
		O	U	70	5.43	3.43	26422	LU70/MED/CP	S62	4		24000+	6400	5450	1900	22	TCLP Compliant, Consumer Pack			111
		O	U	70	5.43	3.43	11340	LU70/D/MED/ECO	S62	6		24000+	5950	5050	1900	22	TCLP Compliant, Diffuse			111
ED23.5	E39	O	U	70	7.75	5.00	85368	LU70/H/ECO	S62	12		24000+	6400	5450	1900	22	TCLP Compliant			111
		O	U	70	7.75	5.00	26426	LU70/CP	S62	4		24000+	6400	5450	1900	22	TCLP Compliant, Consumer Pack			111
		O	U	70	7.75	5.00	72605	LU70/D/H/ECO	S62	12		24000+	5950	5050	1900	22	TCLP Compliant, Diffuse			111
100 Watts																				
B17	E26	O	U	100	5.50	3.43	13250	LU100/MED/ECO	S54	6		24000+	9500	8550	2000	22	TCLP Compliant			111
		O	U	100	5.50	3.43	26423	LU100/MED/CP	S54	4		24000+	9500	8550	2000	22	TCLP Compliant, Consumer Pack			111
		O	U	100	5.50	3.43	13251	LU100/D/MED/ECO	S54	6		24000+	8800	7920	2000	22	TCLP Compliant, Diffuse			111
ED23.5	E39	O	U	100	7.75	5.00	85369	LU100/H/ECO	S54	12		24000+	9500	8550	2000	22	TCLP Compliant			111
		O	U	100	7.75	5.00	26427	LU100/CP	S54	4		24000+	9500	8550	2000	22	TCLP Compliant, Consumer Pack			111
		O	U	100	7.75	5.00	72606	LU100/D/H/ECO	S54	12		24000+	8800	7920	2000	22	TCLP Compliant, Diffuse			111
150 Watts																				
B17	E26	O	U	150	5.75	3.50	13252	LU150/MED/ECO	S55	6		24000+	16000	14400	2000	22	TCLP Compliant			111
		O	U	150	5.75	3.50	26424	LU150/MED/CP	S55	4		24000+	16000	14400	2000	22	TCLP Compliant, Consumer Pack			111
		O	U	150	5.75	3.50	13253	LU150/D/MED/ECO	S55	6		24000+	15000	13500	2000	22	TCLP Compliant, Diffuse			111
ED23.5	E39	O	U	150	7.75	5.00	85371	LU150/55/H/ECO	S55	12		24000+	16000	14400	2000	22	TCLP Compliant			111
		O	U	150	7.75	5.00	26429	LU150/55/CP	S55	4		24000+	16000	14400	2000	22	TCLP Compliant, Consumer Pack			111
		O	U	150	7.75	5.00	85380	LU150/55/D/H/ECO	S55	12		24000+	15000	13500	2000	22	TCLP Compliant, Diffuse			111
200 Watts																				
ED18	E39	O	U	200	9.75	5.75	85372	LU200/H/ECO	S66	12		24000+	22000	19800	2100	22	TCLP Compliant			111
250 Watts																				
ED18	E39	O	U	250	9.75	5.75	85377	LU250/H/ECO	S50	12		24000+	28000	25200	2100	22	TCLP Compliant			111
ED18	E39	O	U	250	9.75	5.75	26430	LU250/CP	S50	4		24000+	28000	25200	2100	22	Clear, Consumer Pack			111
ED28	E39	O	U	250	9.00	5.00	85381	LU250/D/H/ECO	S50	12		24000+	26000	23400	2100	22	TCLP Compliant, Diffuse			111
310 Watts																				
ED18	E39	O	U	310	9.75	5.75	76996	LU310/H/ECO	S67	12		24000+	37000	33300	2100	22	TCLP Compliant			111
400 Watts																				
ED18	E39	O	U	400	9.75	5.75	85379	LU400/H/ECO	S51	12		24000+	51000	45000	2100	22	TCLP Compliant			111
ED18	E39	O	U	400	9.75	5.75	26431	LU400/CP	S51	4		24000+	51000	45000	2100	22	Clear, Consumer Pack			111
ED37	E39	O	U	400	11.31	7.00	76998	LU400/D/H/ECO	S51	6		24000+	47500	42750	2100	22	TCLP Compliant, Diffuse			111
1000 Watts																				
E25	E39	O	U	1000	15.06	8.75	44058	LU1000/ECO	S52	6		24000+	130000	117000	2100	22	TCLP Compliant		49	111
Ecolux® Standby Longlife Lucalox® Lamps (TCLP Compliant)																				
70 Watts																				
ED23.5	E39	O	U	70	7.75	5.00	61367	LU70/SBY/XL/ECO	S62	12		40000	6400	5050	2000	22	Clear, Standby Longlife, Dual Arc Tube, TCLP Compliant			111
100 Watts																				
ED23.5	E39	O	U	100	7.75	5.00	61368	LU100/SBY/XL/ECO	S54	12		40000	9500	8190	2000	22	Clear, Standby Longlife, Dual Arc Tube, TCLP Compliant			111
150 Watts																				
ED23.5	E39	O	U	150	7.75	5.00	61369	LU150/55SBYXLECO	S55	12		40000	16000	14000	2000	22	Clear, Standby Longlife, Dual Arc Tube, TCLP Compliant			111
200 Watts																				
ED18	E39	O	U	200	9.75	5.75	61370	LU200/SBY/XL/ECO	S66	12		40000	21500	18150	2000	22	Clear, Standby Longlife, Dual Arc Tube, TCLP Compliant			111

For the most up-to-date product information, see www.gelighting.com. To convert inches to millimeters, multiply by 25.4.
All footnotes, warning and caution notices found at the end of this section (page 3-19).

Bulb Shape	Base	LET	OP	Watts	MOL (in)	LCL (in)	Order Code	Description	ANSI Ballast Type	Case Qty	CBCP	Rated Life (hrs)	Initial Lumens	Mean Lumens	Color Temp K	CRI	Additional Information	Reduced Watts/ High Color Rendering	Footnotes	Warning and Caution Notices
Ecolux® Standby Longlife Lucalox® Lamps (TCLP Compliant) (continued)																				
250 Watts																				
ED18	E39	O	U	250	9.75	5.75	61371	LU250/SBY/XL/ECO	S50	12		40000	27500	24750	2000	22	Clear, Standby Longlife, Dual Arc Tube, TCLP Compliant			111
400 Watts																				
ED18	E39	O	U	400	9.75	5.75	61372	LU400/SBY/XL/ECO	S51	12		40000	50000	45000	2000	22	Clear, Standby Longlife, Dual Arc Tube, TCLP Compliant		49	111
Standby Longlife Lucalox® Lamps																				
1000 Watts																				
E25	E39	O	U	1000	15.06	8.75	27185	LU1000/SBY/XL	S52	6		40000	127000	115000	2100	22	Clear, Standby Longlife, Dual Arc Tube		49	111
Ecolux® NC Non-Cycling High Pressure Sodium Lamps (TCLP Compliant)																				
70 Watts																				
ED23.5	E39	O	U	70	7.75	5.00	14672	LU70/ECO/NC	S62	12		30000	6300	5670	1900	23	Clear, Non-Cycling			111
100 Watts																				
ED23.5	E39	O	U	100	7.75	5.00	14673	LU100/ECO/NC	S54	12		30000	9800	8820	2000	23	Clear, Non-Cycling			111
150 Watts																				
ED23.5	E39	O	U	150	7.75	5.00	40390	LU150/55/ECO/NC	S55	12		40000	16000	14400	2000	23	Clear, Non-Cycling			111
200 Watts																				
ED18	E39	O	U	200	9.75	5.75	45059	LU200/ECO/NC	S66	20		30000	22000	19800	2100	22	Clear, Non-Cycling			111
250 Watts																				
ED18	E39	O	U	250	9.75	5.75	14674	LU250/ECO/NC	S50	12		40000	29000	26100	2000	30	Clear, Non-Cycling			111
400 Watts																				
ED18	E39	O	U	400	9.75	5.75	14675	LU400/ECO/NC	S51	12		40000	54000	48600	2100	30	Clear, Non-Cycling			111
Lucalox® PSL Lamps for Greenhouse																				
400 Watts																				
T15	E40	O	U	400	11.5	6.89	41845	LU400/XOPSL/T/40	HID	12		12000	56500		2100	22	Clear, 110V			111
600 Watts																				
T15	E40	O	U	600	11.5	6.65	41850	LU600/XOPSL/T/40	HID	12		12000	90000		2100	22	Clear, 115V			111
750 Watts																				
T16	E40	O	U	750	11.5	6.73	41856	LU750/XOPSL/T/40	HID	12		10000	112000		2100	22	Clear, 115V			111
		O	U	750	11.5	6.89	76134	LU750/400PSL/T40	HID	12		12000	112000		2100	22	Clear, 205V			111
Mercury Lamps																				
100 Watts																				
ED17	E26	O	U	100	5.43	3.50	17113	HR100DX38/MED	H38	5		20000	4000	2800	3900	50	Deluxe White			113
ED23.5	E39	O	U	100	7.50	5.00	12471	HR100A38	H38	5		20000	3850	2695	5700	15	Clear			113
		O	U	100	7.50	5.00	22575	HR100DX38	H38	12		20000	4000	2800	3900	50	Deluxe White			113
		O	U	100	7.50	5.00	26437	HR100DX38/CP	H38	4		20000	4000	2800	3900	50	Deluxe White, Consumer Pack			113
175 Watts																				
ED28	E39	O	U	175	8.25	5.00	24048	HR175A39	H39	12		20000	7850	6670	5700	15	Clear			113
		O	U	175	8.25	5.00	26440	HR175A39/CP	H39	4		20000	7850	6670	5700	15	Clear, Consumer Pack			113
		O	U	175	8.25	5.00	24062	HR175DX39	H39	12		20000	7800	6630	3900	50	Deluxe White			113
		O	U	175	8.25	5.00	26439	HR175DX39/CP	H39	4		20000	7800	6630	3900	50	Deluxe White, Consumer Pack			113
250 Watts																				
ED28	E39	O	U	250	8.25	5.00	24068	HR250A37	H37	12		20000	11000	7700	5700	15	Clear			113
		O	U	250	8.25	5.00	32127	HR250DX37	H37	12		20000	11200	7840	3900	50	Deluxe White			113
400 Watts																				
ED37	E39	O	U	400	11.31	7.00	23974	HR400A33	H33	6		20000	21000	14700	5700	15	Clear			113
		O	U	400	11.31	7.00	23998	HR400DX33	H33	6		20000	22600	15800	3900	50	Deluxe White			113

General Information

Fixture Requirements – Lamp Enclosure type

HID lamps have fixture requirements that must be followed. The following three codes identify the appropriate fixture for a particular lamp. Lamps having an "O" code can be operated in an "Open or Enclosed" fixture. Lamps with a "S" code can be used in open fixtures only if operated in a vertical ±15° burn position. Lamps in all other burn positions must be suitably enclosed.

O = Open or Enclosed Fixtures

E = Enclosed Fixtures Only

S = Lamps operated in a vertical position (Base Up or Down), ±15°, can be used in an open fixture. Lamps burned in any other orientation must be used in "enclosed fixtures only."

Use in Enclosed Fixtures. "Enclosed" fixture means a fixture suitably enclosed and designed to contain fragments of hot quartz or glass (up to 1100°C) per UL Standard #1598 (if in doubt, contact your fixture manufacturer).

Use In Open Fixtures. For lamps operated in the vertical position ±15° that are not designated "Enclosed Fixtures Only," lamp may be used in an open or enclosed lighting fixture depending upon the application and operating environment. For example, if the lamp is located near combustible material or in an area which is unoccupied for extended periods, an enclosed fixture which can contain fragments of hot quartz or glass is recommended. For more information, contact your fixture manufacturer.

Protection of Bulbs from Moisture

Outer bulbs of HID lamps are made of heat-resistant glass, designed to have strength and thermal-shock-resistant characteristics suitable for normal applications in typical luminaries. However, shielding of lamps must be provided to avoid bulb breakage that could result from direct contact with liquids (such as water) during operation.

Rated Life

Values are based on laboratory tests of a large number of representative lamps under controlled conditions, including operation at 10 hours per start on ballasts having specified electrical characteristics. Individual lamps or groups of lamps may, of course, vary from the Rated Life shown. Lamp operating conditions can also affect life. Where Rated Life is less than 24,000 hours, it is a MEDIAN value of life expectancy; that is, the total operating time at which, under normal operating conditions, 50% of any large group of initially installed lamps is expected to be still burning. Where Rated Life is 24,000+ hours, 67% of lamps are expected to be still burning at 24,000 hours. For cost-of-light calculations involving these lamps, if an estimated operating time is required at which 50% of the lamps will still be burning, a value of 28,500 hours is suggested. At burning cycles shorter than 10 hours per start, the median life will be shortened approximately as follows:

5 hrs/start:	approx. life 75% of rating
2-1/2 hrs/start:	approx. life 56% of rating
1-1/4 hrs/start:	approx. life 42% of rating

Lumens – Lumens listed are reference lumens

Rated average lamp lumens are obtained under controlled laboratory conditions in a prescribed burning position. **Initial Reference Lumens** refer to the lamp lumen output after 100-hours burning. **Mean Reference Lumens** refer to the lamp lumen output at the mean lumen point during lamp life. The mean lumen point occurs at 50% rated life for HPS and mercury lamps, and at 40% rated life for metal halide lamps. Lamp performance on typical systems under typical service conditions will vary from the reference lumen ratings.

High Intensity Discharge lighting systems are subject to a wide range of variations which may affect final lighting levels. As a result, lamp performance on actual systems may vary due to lamp orientation, ambient temperatures, ballast variations, line voltage and other reasons. Care must be taken when choosing a system to consider how these changes can affect your light levels both initially and at the mean lumen point.

Ballasts

HID lamps (except E-Z-Merc®) require auxiliary ballast equipment designed to produce proper electrical values. Actual lamp watts may vary depending on ballast characteristics. For total system watts, add nominal ballast watts.

All Lucalox®, Mercury, and Metal Halide lamps (except I-Line) will start at ambient temperatures of -22°F (-30°C). I-Line Multi-Vapor® will start at ambient temperatures of 5°F (-15°C) when used on approved mercury ballasts.

Start Characteristics

Full light output does not occur immediately when power is applied. Instead, there is a time delay for the lamp to reach 90% total light output. The starting delay for High Pressure Sodium is 3-4 minutes, for Metal Halide 2-5 minutes, and for Mercury 5-7 minutes.

Restart Characteristics

With a power interruption of a half cycle or more, the arc will extinguish. When power is immediately reapplied, full light output does not occur immediately. For HPS lamps there is a delay of 1 minute to reach 90% total light output; however, Lucalox® LU1000 requires 2 minutes and E-Z Lux® lamps require 3 minutes to reach 90% total light output. For most Metal Halide lamps, including CMH®, when the power is immediately reapplied, there will be a delay of 10 to 17 minutes before the lamps reach the 90% light output level. PulseArc® lamps restrike in <4 minutes. The restart delay for mercury lamps is 3 to 6 minutes to reach 90% total light output.

Operating Positions and Codes

Mercury and High Pressure Sodium lamps may be operated in any burn position and will still maintain their rated performance specifications. Metal Halide and Low Pressure Sodium lamps, however, are optimized for performance in specific burn positions, or may be restricted to certain burn positions for safety reasons.

U = Universal burning position

HBU = Horizontal -15° to Base Up

HBD = Horizontal +15° to Base Down

HOR = Horizontal ±15°

HOR PA = ±75°

HOR ±60° = applies to MVR 1650

H45 = Horizontal to ±45° only

VBU = Vertical Base Up ±15°

VBD = Vertical Base Down ±15°

If no special burn position is noted, the burn position is universal.

HID Color

The color temperature and CRI listed in the tabular data are for reference purposes only. All high intensity discharge lamps exhibit some degree of lamp-to-lamp color variation and shift over life. These characteristics can be increased based on choice of fixture, ballast, burning position, and ambient conditions. Color variation can be greater than normal during the initial 100 hours of burning. Where color consistency is important, consider using ConstantColor® CMH® for better performance. Contact your local GE Lighting representative for more information.

Export Base Lamps (/27 and /40)

Export only lamps have a non-domestic (non-U.S.) base and are not intended for use in the United States due to potential shock hazard. The lamps are identified by "/27" or "/40" at the end of the lamp description and comply with electrical characteristics defined by IEC standards.

Operating Notes

CMH® Chromafit™ Metal Halide Lamps

Use in enclosed luminaire with front cover made of glass, capable of containing the fragments of a lamp should it shatter, to avoid risk of fire. Do not use with Polymeric Lens.

MXR32 Metal Halide Lamp and Electronic Ballast

MXR32 lamps must be operated on GE's special, high-power-factor electronic ballast, HAL32/120. Outside dimensions for the ballast are 9-1/4" long, 3-1/8" wide and 1-3/4" high.

Dimming

High Wattage CMH® lamps may be dimmed to 50% of full rated wattage. With dimming, the color shifts to a cooler (higher Kelvin) temperature and CRI decreases. The dimming of 20-150W CMH® lamps is not normally recommended. Large power reductions significantly alter the thermal characteristics of the lamp resulting in color shift. Quartz metal halide and mercury vapor lamps may be dimmed to 50% of full rated wattage. High pressure sodium lamps may be dimmed to 35%. For all dimming, the lamp must be started in full-power mode and must be operated in that mode for a minimum of fifteen minutes prior to reduced-power operation. Minimum open circuit voltage must meet ANSI requirements at full-power, during power transition, and in the reduced-power mode to prevent premature cycling (see appropriate ANSI lamp documents for specific minimum OCV requirements). Other application guidelines may apply.

Footnotes

9 Do not use this lamp in fixtures designed for less than rated lamp wattage.

14 Life shown is for vertical +15° operation.

16 Approximate lumen ratings at 45° burning position: Initial – 145,000. Mean – 124,000.

17 Rated life based on 5 or more burning hours per start.

28 Use only 1000-watt H12 or H34-type ballasts. Do not use on 1000-watt H36-type ballasts.

32 Lamp will run at 400-watts when used on a linear reactor ballast.

33 Rated life based on 11 hours per start.

38 Requires a non-ANSI designated ballast with a special, add-on metal halide ignitor. Contact your local GE representative for a list of approved ballasts and ignitors.

39 UV Control is a quartz material that effectively cuts UVB and UVC radiation.

42 Approximate lumen ratings at 45° burning position: Initial – 153,000. Mean – 139,000.

43 When operated on a 120 hrs. cycle (minimum), lamp life rating may be extended by up to 50% based on engineering estimates.

44 Rated life based on 7 hours per start.

45 Use low frequency square wave (LFSW) electronic ballast, peak lead ballast, or system which can shut itself off if ballast overheating occurs.

46 Use only with the following types of H39 175-watt mercury ballasts: high-reactance lag-type autotransformers or 240-volt and 277-volt reactors. Do not use with CW (lead-type) or CWA ballasts.

47 Use only with the following types of H37 250-watt mercury ballasts: high-reactance lag-type autotransformers or 240-volt and 277-volt reactors. Do not use with CW (lead-type) or CWA ballasts.

48 Use only with the following types of H33 400-watt mercury ballasts: high-reactance lag-type autotransformers, reactors, CWA auto regulators or CW regulators.

49 Not for use with lampholders that have stainless steel center contacts to avoid lamp or lampholder damage due to arcing.

50 Not for use on Magnetic-Regulator or Electronic-Regulator ballast systems to avoid ballast overheating.

51 Use only with low frequency square wave (LFSW) electronic ballast.

52 Use only with approved ballast, do not use on high frequency electronic ballasts.

53 Rated life is 15000 hours on magnetic ballasts.

Warning Notices

THE FOLLOWING WARNING NOTICES MUST BE COMPLIED WITH TO HELP AVOID POSSIBLE LAMP RUPTURE. General Electric Company will not be responsible for poor lamp performance, personal injury or property damage resulting from failure to follow these instructions.

HID LAMPS – GENERAL

WARNING

Most HID lamps are constructed of an outer bulb with an internal arc tube made of quartz. The arc tube operates under high pressure at very high temperatures—as high as approximately 1100°C. The arc tube and outer bulb may unexpectedly rupture due to internal causes or external factors such as a system failure or misapplication.

An arc tube rupture can burst and shatter the outer glass bulb resulting in the discharge of glass fragments and extremely hot quartz particles (as high as 1100°C). There is a risk of personal injury, property damage, burns and fire.

Some lamps are position-sensitive and must only be operated in specified burning positions (see "Additional Information" column in this catalog) with compatible electrical equipment in the types of fixtures prescribed in "Lamp Enclosure Type" on page 3-22 of this catalog.

In addition to the general warnings above, there are specific warnings for the HID lamp types listed below.

Metal Halide Lamps

Fixture lens/diffuser material must be able to contain fragments of hot quartz or glass (up to 1100°C). If you do not know whether your fixture can safely withstand an arc tube rupture, contact your fixture manufacturer.

In continuously operating systems (24 hours/day, 7 days/week), turn lamps off once per week for at least 15 minutes. FAILURE TO COMPLY INCREASES THE RISK OF RUPTURE.

Ceramic metal halide lamps can be operated 24/7.

Relamp fixtures at or before the end of rated life. Beyond rated life, light output diminishes while energy consumption and risk of rupture increase.

High Pressure Sodium Lamps

This is a vacuum jacket lamp and may implode if broken. As a precaution, wear safety glasses and gloves when installing or removing lamp. High pressure sodium lamps are not position-sensitive and may be operated in any burning position.

Mercury Lamps

Fixture lens/diffuser material must be able to contain fragments of hot quartz or glass (up to 1100°C). If you do not know whether your fixture can safely withstand an arc tube rupture, contact your fixture manufacturer.

Relamp fixtures at or before the end of rated life. Beyond rated life, light output diminishes while energy consumption and risk of rupture increase.

Mercury lamps are not position-sensitive and may be operated in any burning position.

Low Pressure Sodium Lamps

These lamps contain sodium which will ignite when exposed to water. If lamps are not disposed of properly, there is a risk of fire in the disposal vessel. Consult GE for disposal instructions.

Lamp Enclosure Type

Use in Enclosed Fixtures. "Enclosed" fixture means a fixture suitably enclosed and designed to contain fragments of hot quartz or glass (up to 1100°C) in accordance with UL Standard #1598 (if in doubt, contact your fixture manufacturer).

Use In Open Fixtures. For lamps operated in the vertical position ±15° that are not designated "Enclosed Fixtures Only," lamp may be used in an open or enclosed lighting fixture depending upon the application and operating environment. For example, if the lamp is located near combustible material or in an area which is unoccupied for extended periods, an enclosed fixture which can contain fragments of hot quartz or glass is recommended. For more information, contact your fixture manufacturer.

Important Notice

In accordance to Federal Regulations (21 CFR 1040.30), the following notice applies to all lamps in the HID section of this catalog except E-Z Merc self ballasted lamps, High Pressure, Low Pressure Sodium Lamps, Saf-T-Gard® Multi-Vapor Lamps, CMH® MR16, CMH® PAR20 and CMH® PAR30.

⚠ **R WARNING: This lamp can cause serious skin burn and eye inflammation from shortwave ultraviolet radiation if outer envelope of the lamp is broken or punctured. Do not use where people will remain for more than a few minutes unless adequate shielding or other safety precautions are used. Lamps that will automatically extinguish when the outer envelope is broken or punctured are commercially available.**

Warning and Caution Notices

100 – CMH® PAR38 INTEGRAL Kr85

⚠ WARNING

Risk of electric shock

- Turn power off before inspection, installation or removal
- Do not use where directly exposed to water
- Not for use with dimmers
- Do not open - no user serviceable parts inside

Risk of fire

- Keep combustible materials away from lamp
- Do not use in totally enclosed recessed fixtures

A damaged lamp emits UV radiation which may cause eye/skin injury

- Turn power off if glass bulb is broken. Remove and dispose of lamp.

Unexpected lamp rupture may cause injury, fire, or property damage

- Do not exceed rated voltage
- Do not use lamp if outer glass is scratched or broken
- Do not store flammable materials near/below lamp
- Do not use beyond rated life
- Do not turn on lamp until fully installed

⚠ CAUTION

Risk of burn

- Allow lamp to cool before handling
- Do not turn on lamp until fully installed

Lamp may shatter and cause injury if broken

- Do not use lamp if outer glass is scratched or broken
- Dispose of lamp in a closed container
- Do not use excessive force when installing lamp

Notes

- ARC tube fill gas contains Kr85
- CMH® lamps may operate 24 hours a day/7 days a week to rated life—no shut off required
- This product complies with Part 18 of the FCC Rules, but may cause interference to radios, televisions, wireless telephones, and remote controls. Avoid placing this product near these devices. If interference occurs, move the product away from the device or plug either into a different outlet. Do not install this product near maritime safety equipment or other critical navigation or communication equipment operating between 0.45-30 MHz. This device is not intended for use with emergency exit fixtures or lights, electronic timers, photocells, or with dimmers
- Use only on 120V, 60Hz circuits. Do not operate with additional ballasts. Do not use where directly exposed to water.
- When illuminating light-sensitive materials use of an extra UV filter is recommended.
- Lamps may require several hours of operation to stabilize in color. Color change may also be affected by shock and vibration. Color appearance may vary between individual lamps.

101 – Arcstream®

⚠ WARNING

Risk of electric shock

- Turn power off before inspection, installation or removal
- Do not use where directly exposed to water or outdoors without an enclosed fixture

Risk of fire

- Keep combustible materials away from lamp
- Use in fixture rated for this product
- Use thermally protected ballast

A damaged lamp emits UV radiation which may cause eye/skin injury

- Turn power off if glass bulb is broken. Remove and dispose of lamp.

Unexpected lamp rupture may cause injury, fire, or property damage

- Do not exceed rated voltage
- Do not use where directly exposed to water or outdoors without an enclosed fixture
- Use in enclosed fixture rated for this product
- Do not use lamp if outer glass is scratched or broken
- Use only properly rated ballast
- Operate lamp only in specified position
- Turn lamp off at least once for 15 minutes per week
- Do not turn on lamp until fully installed

⚠ CAUTION

Risk of burn

- Allow lamp to cool before handling
- Do not turn on lamp until fully installed

Lamp may shatter and cause injury if broken

- Wear safety glasses and gloves when handling lamp
- Do not use lamp if outer glass is scratched or broken
- Do not use excessive force when installing lamp

102 – Arcstream® G12 Kr85

⚠ WARNING

Risk of electric shock

- Turn power off before inspection, installation or removal
- Do not use where directly exposed to water or outdoors without an enclosed fixture

Risk of fire

- Keep combustible materials away from lamp
- Use in fixture rated for this product
- Use thermally protected ballast

Lamp emits UV radiation which may cause eye/skin injury

- Eye or skin irritation may result from exposure. Use appropriate shielding. RG-2

Unexpected lamp rupture may cause injury, fire, or property damage

- Do not exceed rated voltage
- Do not touch glass with bare hands
- Do not use where directly exposed to water or outdoors without an enclosed fixture
- Use in enclosed fixture rated for this product
- Do not use lamp if outer glass is scratched or broken
- Use only properly rated ballast

Warning and Caution Notices (continued)

- Turn lamp off at least once for 15 minutes per week
- Do not turn on lamp until fully installed

⚠ CAUTION

Risk of burn

- Allow lamp to cool before handling
- Do not turn on lamp until fully installed

Lamp may shatter and cause injury if broken

- Do not use lamp if outer glass is scratched or broken
- Do not use excessive force when installing lamp

Notes

- ARC tube fill gas contains Kr85

103 – Arcstream® Rx7s Kr85

⚠ WARNING

Risk of electric shock

- Turn power off before inspection, installation or removal
- Do not use where directly exposed to water or outdoors without an enclosed fixture

Risk of fire

- Keep combustible materials away from lamp
- Use in fixture rated for this product
- Use thermally protected ballast

A damaged lamp emits UV radiation which may cause eye/skin injury

- Turn power off if glass bulb is broken. Remove and dispose of lamp.

Unexpected lamp rupture may cause injury, fire, or property damage

- Do not exceed rated voltage
- Do not touch glass with bare hands
- Do not use in wet locations
- Use in enclosed fixture rated for this product
- Do not use lamp if outer glass is scratched or broken
- Use only properly rated ballast
- Operate lamp only in specified position
- Turn lamp off at least once for 15 minutes per week
- Do not turn on lamp until fully installed

⚠ CAUTION

Risk of burn

- Allow lamp to cool before handling
- Do not turn on lamp until fully installed

Lamp may shatter and cause injury if broken

- Wear safety glasses and gloves when handling lamp
- Do not use lamp if outer glass is scratched or broken
- Dispose of lamp in a closed container
- Do not use excessive force when installing lamp

Notes

- ARC tube fill gas contains Kr85

104 – CMH® GU6.5, G12 and Mini Kr85

⚠ WARNING

Risk of electric shock

- Turn power off before inspection, installation or removal
- Do not use where directly exposed to water or outdoors without an enclosed fixture

Risk of fire

- Keep combustible materials away from lamp
- Use in fixture rated for this product
- Use fused or thermally protected ballast—see instructions

A damaged lamp emits UV radiation which may cause eye/skin injury

- Turn power off if glass bulb is broken. Remove and dispose of lamp.

Unexpected lamp rupture may cause injury, fire, or property damage

- Do not exceed rated voltage
- Normal handling with bare hands is acceptable. Excessive handling of the quartz outer bulb should be avoided.
- Do not use where directly exposed to water or outdoors without an enclosed fixture
- Use in enclosed fixture rated for this product
- Do not use lamp if outer glass is scratched or broken
- Use only properly rated ballast
- Do not use beyond rated life
- Do not turn on lamp until fully installed

⚠ CAUTION

Risk of burn

- Allow lamp to cool before handling
- Do not turn on lamp until fully installed

Lamp may shatter and cause injury if broken

- Do not use lamp if outer glass is scratched or broken
- Do not use excessive force when installing lamp

Notes

- ARC tube fill gas contains Kr85
- CMH® lamps may operate 24 hours a day/7 days a week to rated life—no shut off required

105 – CMH® HW HPS Kr85

⚠ WARNING

Risk of electric shock

- Turn power off before inspection, installation or removal
- Do not use where directly exposed to water or outdoors without an enclosed fixture

Risk of fire

- Keep combustible materials away from lamp
- Use in fixture rated for this product
- CMH® Chromafit™ lamps are compatible with properly rated magnetic HPS ballasts and low frequency square wave (LFSW) electronic ballasts. For CMH400 /R use LFSW electronic ballast, peak lead ballast or system which can shut itself off if ballast overheating occurs.

A damaged lamp emits UV radiation which may cause eye/skin injury

- Turn power off if glass bulb is broken. Remove and dispose of lamp.

Unexpected lamp rupture may cause injury, fire, or property damage

- Do not exceed rated voltage
- Do not use where directly exposed to water or outdoors without an enclosed fixture
- Use in enclosed luminaire with front cover made of GLASS, capable of containing the fragments of a lamp should it shatter, to avoid risk of fire. Do not use with polymeric lens.
- Do not use lamp if outer glass is scratched or broken
- Use only properly rated ballast
- Do not use beyond rated life
- Do not turn on lamp until fully installed

Warning and Caution Notices (continued)

⚠ CAUTION

Risk of burn
- Allow lamp to cool before handling
- Do not turn on lamp until fully installed

Lamp may shatter and cause injury if broken
- Wear safety glasses and gloves when handling lamp
- Do not use lamp if outer glass is scratched or broken
- Dispose of lamp in a closed container
- Do not use excessive force when installing lamp

Notes
- ARC tube fill gas contains Kr85
- CMH® lamps may operate 24 hours a day/7 days a week to rated life—no shut off required

106 – CMH® HW PA Kr85

⚠ WARNING

Risk of electric shock
- Turn power off before inspection, installation or removal
- Do not use where directly exposed to water or outdoors without an enclosed fixture

Risk of fire
- Keep combustible materials away from lamp
- Use GE approved ballast/control gear

A damaged lamp emits UV radiation which may cause eye/skin injury
- Turn power off if glass bulb is broken. Remove and dispose of lamp.

Unexpected lamp rupture may cause injury, fire, or property damage
- Do not exceed rated voltage
- Do not use where directly exposed to water or outdoors without an enclosed fixture
- Do not use lamp if outer glass is scratched or broken
- Use only properly rated ballast
- Operate lamp only in specified position
- Do not store flammable materials near/below lamp
- Do not use beyond rated life
- Do not turn on lamp until fully installed

⚠ CAUTION

Risk of burn
- Allow lamp to cool before handling
- Do not turn on lamp until fully installed

Lamp may shatter and cause injury if broken
- Do not use lamp if outer glass is scratched or broken
- Dispose of lamp in a closed container
- Do not use excessive force when installing lamp

Notes
- ARC tube fill gas contains Kr85
- CMH® lamps may operate 24 hours a day/7 days a week to rated life—no shut off required

107 – CMH® PAR 20-30 MR16 Kr85

⚠ WARNING

Risk of electric shock
- Turn power off before inspection, installation or removal
- Do not use where directly exposed to water or outdoors without an enclosed fixture

Risk of fire
- Keep combustible materials away from lamp
- Use in fixture rated for this product
- Use fused or thermally protected ballast—see instructions

Unexpected lamp rupture may cause injury, fire, or property damage
- Do not exceed rated voltage
- Do not use where directly exposed to water or outdoors without an enclosed fixture
- Do not use lamp if outer glass is scratched or broken
- Use only properly rated ballast
- Do not store flammable materials near/below lamp
- Do not use beyond rated life
- Do not turn on lamp until fully installed

⚠ CAUTION

Risk of burn
- Allow lamp to cool before handling
- Do not turn on lamp until fully installed

Lamp may shatter and cause injury if broken
- Do not use lamp if outer glass is scratched or broken
- Do not use excessive force when installing lamp

Notes
- ARC tube fill gas contains Kr85
- CMH® lamps may operate 24 hours a day/7 days a week to rated life—no shut off required
- Lamps designated as CMH70/PAR30 do not require thermally protected ballasts

108 – CMH® PAR38 Kr85

⚠ WARNING

Risk of electric shock
- Turn power off before inspection, installation or removal
- Do not use where directly exposed to water or outdoors without an enclosed fixture

Risk of fire
- Keep combustible materials away from lamp
- Use in fixture rated for this product

A damaged lamp emits UV radiation which may cause eye/skin injury
- Turn power off if glass bulb is broken. Remove and dispose of lamp.

Unexpected lamp rupture may cause injury, fire, or property damage
- Do not exceed rated voltage
- Do not use lamp if outer glass is scratched or broken
- Use only properly rated ballast
- Do not turn on lamp until fully installed

⚠ CAUTION

Risk of burn
- Allow lamp to cool before handling
- Do not turn on lamp until fully installed

Lamp may shatter and cause injury if broken
- Do not use lamp if outer glass is scratched or broken

Notes
- ARC tube fill gas contains Kr85
- CMH® lamps may operate 24 hours a day/7 days a week to rated life—no shut off required

Warning and Caution Notices (continued)

109 – CMH® TD Kr85

⚠ WARNING

Risk of electric shock

- Turn power off before inspection, installation or removal
- Do not use where directly exposed to water or outdoors without an enclosed fixture

Risk of fire

- Keep combustible materials away from lamp
- Use in fixture rated for this product

A damaged lamp emits UV radiation which may cause eye/skin injury

- Turn power off if glass bulb is broken. Remove and dispose of lamp.

Unexpected lamp rupture may cause injury, fire, or property damage

- Do not exceed rated voltage
- Normal handling with bare hands is acceptable. Excessive handling of the quartz outer bulb should be avoided.
- Do not use where directly exposed to water or outdoors without an enclosed fixture
- Use in enclosed fixture rated for this product
- Do not use lamp if outer glass is scratched or broken
- Use only properly rated ballast
- Operate lamp only in specified position
- Do not use beyond rated life
- Do not turn on lamp until fully installed

⚠ CAUTION

Risk of burn

- Allow lamp to cool before handling
- Do not turn on lamp until fully installed

Lamp may shatter and cause injury if broken

- Do not use lamp if outer glass is scratched or broken
- Do not use excessive force when installing lamp

Notes

- ARC tube fill gas contains Kr85
- CMH® lamps may operate 24 hours a day/7 days a week to rated life—no shut off required

110 – Kolorarc® Kr85

⚠ WARNING

Risk of electric shock

- Turn power off before inspection, installation or removal
- Do not use where directly exposed to water or outdoors without an enclosed fixture

Risk of fire

- Keep combustible materials away from lamp
- Use in fixture rated for this product

A damaged lamp emits UV radiation which may cause eye/skin injury

- Turn power off if glass bulb is broken. Remove and dispose of lamp.

Unexpected lamp rupture may cause injury, fire, or property damage

- Do not exceed rated voltage
- Do not use where directly exposed to water or outdoors without an enclosed fixture
- Use in enclosed fixture rated for this product
- Do not use lamp if outer glass is scratched or broken
- Use only properly rated ballast
- Operate lamp only in specified position
- Turn lamp off at least once for 15 minutes per week
- Do not turn on lamp until fully installed

⚠ CAUTION

Risk of burn

- Allow lamp to cool before handling
- Do not turn on lamp until fully installed

Lamp may shatter and cause injury if broken

- Wear safety glasses and gloves when handling lamp
- Do not use lamp if outer glass is scratched or broken
- Dispose of lamp in a closed container
- Do not use excessive force when installing lamp

Notes

- ARC tube fill gas contains Kr85

111 – Lucalox®

⚠ WARNING

Risk of electric shock

- Turn power off before inspection, installation or removal
- Do not use where directly exposed to water or outdoors without an enclosed fixture

Risk of fire

- Keep combustible materials away from lamp
- Use in fixture rated for this product

Contains sodium—chemical burn risk

- Avoid skin contact with broken pieces

Unexpected lamp rupture may cause injury, fire, or property damage

- Do not exceed rated voltage
- Do not use where directly exposed to water or outdoors without an enclosed fixture
- Do not use lamp if outer glass is scratched or broken
- Use only properly rated ballast
- Do not store flammable materials near/below lamp
- Do not turn on lamp until fully installed

⚠ CAUTION

Risk of burn

- Allow lamp to cool before handling
- Do not turn on lamp until fully installed

Lamp may shatter and cause injury if broken

- Wear safety glasses and gloves when handling lamp
- Do not use lamp if outer glass is scratched or broken
- Dispose of lamp in a closed container
- Do not use excessive force when installing lamp

Warning and Caution Notices (continued)

112 – Lucalox® HO

⚠ WARNING

Risk of electric shock

- Turn power off before inspection, installation or removal
- Do not use where directly exposed to water or outdoors without an enclosed fixture

Risk of fire

- Keep combustible materials away from lamp
- Use in fixture rated for this product
- Use fused or thermally protected ballast—see instructions

Contains sodium—chemical burn risk

- Avoid skin contact with broken pieces

Unexpected lamp rupture may cause injury, fire, or property damage

- Do not exceed rated voltage
- Do not use where directly exposed to water or outdoors without an enclosed fixture
- Do not use lamp if outer glass is scratched or broken
- Use only properly rated ballast
- Do not store flammable materials near/below lamp
- Do not turn on lamp until fully installed

⚠ CAUTION

Risk of burn

- Allow lamp to cool before handling
- Do not turn on lamp until fully installed

Lamp may shatter and cause injury if broken

- Wear safety glasses and gloves when handling lamp
- Do not use lamp if outer glass is scratched or broken
- Dispose of lamp in a closed container
- Do not use excessive force when installing lamp

113 – Mercury

⚠ WARNING

Risk of electric shock

- Turn power off before inspection, installation or removal
- Do not use where directly exposed to water or outdoors without an enclosed fixture

Risk of fire

- Keep combustible materials away from lamp
- Use in fixture rated for this product

A damaged lamp emits UV radiation which may cause eye/skin injury

- Turn power off if glass bulb is broken. Remove and dispose of lamp.

Unexpected lamp rupture may cause injury, fire, or property damage

- Do not exceed rated voltage
- Do not use where directly exposed to water or outdoors without an enclosed fixture
- Do not use lamp if outer glass is scratched or broken
- Use only properly rated ballast
- Do not store flammable materials near/below lamp
- Do not use beyond rated life
- Do not turn on lamp until fully installed

⚠ CAUTION

Risk of burn

- Allow lamp to cool before handling
- Do not turn on lamp until fully installed

Lamp may shatter and cause injury if broken

- Do not use lamp if outer glass is scratched or broken
- Dispose of lamp in a closed container
- Do not use excessive force when installing lamp

Notes

- ARC tube fill gas contains Kr85 (HR 1000 only)

114 – Mercury Saf-T-Gard®

⚠ WARNING

Risk of electric shock

- Turn power off before inspection, installation or removal
- Do not use where directly exposed to water or outdoors without an enclosed fixture

Risk of fire

- Keep combustible materials away from lamp
- Use in fixture rated for this product

Unexpected lamp rupture may cause injury, fire, or property damage

- Do not exceed rated voltage
- Do not use where directly exposed to water or outdoors without an enclosed fixture
- Do not use lamp if outer glass is scratched or broken
- Use only properly rated ballast
- Turn lamp off at least once for 15 minutes per week
- Do not store flammable materials near/below lamp
- Do not use beyond rated life
- Do not turn on lamp until fully installed

⚠ CAUTION

Risk of burn

- Allow lamp to cool before handling
- Do not turn on lamp until fully installed

Lamp may shatter and cause injury if broken

- Do not use lamp if outer glass is scratched or broken
- Dispose of lamp in a closed container
- Do not use excessive force when installing lamp

115 – Mercury Self-Ballasted

⚠ WARNING

Risk of electric shock

- Turn power off before inspection, installation or removal
- Do not use where directly exposed to water or outdoors without an enclosed fixture

Risk of fire

- Keep combustible materials away from lamp
- Use in fixture rated for this product

A damaged lamp emits UV radiation which may cause eye/skin injury

- Turn power off if glass bulb is broken. Remove and dispose of lamp.

Unexpected lamp rupture may cause injury, fire, or property damage

- Do not exceed rated voltage
- Do not use where directly exposed to water or outdoors without an enclosed fixture
- Do not use lamp if outer glass is scratched or broken

Warning and Caution Notices (continued)

⚠ CAUTION

Risk of burn

- Allow lamp to cool before handling
- Do not turn on lamp until fully installed

Lamp may shatter and cause injury if broken

- Do not use lamp if outer glass is scratched or broken
- Dispose of lamp in a closed container
- Do not use excessive force when installing lamp

116 – QMH E-rated Kr85 and CMH®

⚠ WARNING

Risk of electric shock

- Turn power off before inspection, installation or removal
- Do not use where directly exposed to water or outdoors without an enclosed fixture

Risk of fire

- Keep combustible materials away from lamp
- Use in fixture rated for this product

A damaged lamp emits UV radiation which may cause eye/skin injury

- Turn power off if glass bulb is broken. Remove and dispose of lamp.

Unexpected lamp rupture may cause injury, fire, or property damage

- Do not exceed rated voltage
- Do not use where directly exposed to water or outdoors without an enclosed fixture
- Use in enclosed fixture rated for this product
- Do not use lamp if outer glass is scratched or broken
- Use only properly rated ballast
- Operate lamp only in specified position
- Turn lamp off at least once for 15 minutes per week. Does not apply to CMH.®
- Do not use beyond rated life
- If used on a dimming system, see instructions
- Do not turn on lamp until fully installed

⚠ CAUTION

Risk of burn

- Allow lamp to cool before handling
- Do not turn on lamp until fully installed

Lamp may shatter and cause injury if broken

- Do not use lamp if outer glass is scratched or broken
- Dispose of lamp in a closed container
- Do not use excessive force when installing lamp

Notes

- ARC tube fill gas contains Kr85
- CMH® lamps may operate 24 hours a day/7 days a week to rated life—no shut off required

117 – QMH HOR Enclosed Kr85

⚠ WARNING

Risk of electric shock

- Turn power off before inspection, installation or removal
- Do not use where directly exposed to water or outdoors without an enclosed fixture

Risk of fire

- Keep combustible materials away from lamp
- Use in fixture rated for this product

A damaged lamp emits UV radiation which may cause eye/skin injury

- Turn power off if glass bulb is broken. Remove and dispose of lamp.

Unexpected lamp rupture may cause injury, fire, or property damage

- Do not exceed rated voltage
- Do not use where directly exposed to water or outdoors without an enclosed fixture
- Use in enclosed fixture rated for this product
- Do not use lamp if outer glass is scratched or broken
- Use only properly rated ballast
- Operate lamp only in specified position
- Turn lamp off at least once for 15 minutes per week
- Do not use beyond rated life
- Do not remove base locating pin if so equipped
- Do not turn on lamp until fully installed

⚠ CAUTION

Risk of burn

- Allow lamp to cool before handling
- Do not turn on lamp until fully installed

Lamp may shatter and cause injury if broken

- Do not use lamp if outer glass is scratched or broken
- Dispose of lamp in a closed container
- Do not use excessive force when installing lamp

Notes

- ARC tube fill gas contains Kr85

118 – QMH LW Kr85

⚠ WARNING

Risk of electric shock

- Turn power off before inspection, installation or removal
- Do not use where directly exposed to water or outdoors without an enclosed fixture

Risk of fire

- Keep combustible materials away from lamp
- Use in fixture rated for this product

A damaged lamp emits UV radiation which may cause eye/skin injury

- Turn power off if glass bulb is broken. Remove and dispose of lamp.

Unexpected lamp rupture may cause injury, fire, or property damage

- Do not exceed rated voltage
- Do not use where directly exposed to water or outdoors without an enclosed fixture
- Use in enclosed fixture rated for this product
- Do not use lamp if outer glass is scratched or broken

Warning and Caution Notices (continued)

- Use only properly rated ballast
- Turn lamp off at least once for 15 minutes per week
- Do not use beyond rated life
- Do not turn on lamp until fully installed

⚠ CAUTION

Risk of burn

- Allow lamp to cool before handling
- Do not turn on lamp until fully installed

Lamp may shatter and cause injury if broken

- Do not use lamp if outer glass is scratched or broken
- Dispose of lamp in a closed container
- Do not use excessive force when installing lamp

Notes

- ARC tube fill gas contains Kr85

119 – QMH Protected

⚠ WARNING

Risk of electric shock

- Turn power off before inspection, installation or removal
- Do not use where directly exposed to water or outdoors without an enclosed fixture

Risk of fire

- Keep combustible materials away from lamp
- Use in fixture rated for this product

A damaged lamp emits UV radiation which may cause eye/skin injury

- Turn power off if glass bulb is broken. Remove and dispose of lamp.

Unexpected lamp rupture may cause injury, fire, or property damage

- Do not exceed rated voltage
- Do not use where directly exposed to water or outdoors without an enclosed fixture
- Do not use lamp if outer glass is scratched or broken
- Use only properly rated ballast
- Operate lamp only in specified position
- Turn lamp off at least once for 15 minutes per week
- Do not store flammable materials near/below lamp
- Do not use beyond rated life
- If used on a dimming system, see instructions.
- Do not turn on lamp until fully installed

⚠ CAUTION

Risk of burn

- Allow lamp to cool before handling
- Do not turn on lamp until fully installed

Lamp may shatter and cause injury if broken

- Do not use lamp if outer glass is scratched or broken
- Dispose of lamp in a closed container
- Do not use excessive force when installing lamp

120 – QMH Protected Kr85

⚠ WARNING

Risk of electric shock

- Turn power off before inspection, installation or removal
- Do not use where directly exposed to water or outdoors without an enclosed fixture

Risk of fire

- Keep combustible materials away from lamp
- Use in fixture rated for this product

A damaged lamp emits UV radiation which may cause eye/skin injury

- Turn power off if glass bulb is broken. Remove and dispose of lamp.

Unexpected lamp rupture may cause injury, fire, or property damage

- Do not exceed rated voltage
- Do not use where directly exposed to water or outdoors without an enclosed fixture
- Do not use lamp if outer glass is scratched or broken
- Use only properly rated ballast
- Operate lamp only in specified position
- Turn lamp off at least once for 15 minutes per week
- Do not store flammable materials near/below lamp
- Do not use beyond rated life
- Do not turn on lamp until fully installed

⚠ CAUTION

Risk of burn

- Allow lamp to cool before handling
- Do not turn on lamp until fully installed

Lamp may shatter and cause injury if broken

- Do not use lamp if outer glass is scratched or broken
- Dispose of lamp in a closed container
- Do not use excessive force when installing lamp

Notes

- ARC tube fill gas contains Kr85

121 – QMH S-rated

⚠ WARNING

Risk of electric shock

- Turn power off before inspection, installation or removal
- Do not use where directly exposed to water or outdoors without an enclosed fixture

Risk of fire

- Keep combustible materials away from lamp
- Use in fixture rated for this product

A damaged lamp emits UV radiation which may cause eye/skin injury

- Turn power off if glass bulb is broken. Remove and dispose of lamp.

Unexpected lamp rupture may cause injury, fire, or property damage

- Do not exceed rated voltage
- Do not use where directly exposed to water or outdoors without an enclosed fixture
- Use in enclosed fixture rated for this product—see instructions
- Do not use lamp if outer glass is scratched or broken
- Use only properly rated ballast
- Operate lamp only in specified position
- Turn lamp off at least once for 15 minutes per week

Warning and Caution Notices (continued)

- Do not store flammable materials near/below lamp
- Do not use beyond rated life
- If used on a dimming system, see instructions
- Do not turn on lamp until fully installed

⚠ CAUTION

Risk of burn

- Allow lamp to cool before handling
- Do not turn on lamp until fully installed

Lamp may shatter and cause injury if broken

- Wear safety glasses and gloves when handling lamp
- Do not use lamp if outer glass is scratched or broken
- Dispose of lamp in a closed container
- Do not use excessive force when installing lamp

122 – QMH S-rated Kr85

⚠ WARNING

Risk of electric shock

- Turn power off before inspection, installation or removal
- Do not use where directly exposed to water or outdoors without an enclosed fixture

Risk of fire

- Keep combustible materials away from lamp
- Use in fixture rated for this product

A damaged lamp emits UV radiation which may cause eye/skin injury

- Turn power off if glass bulb is broken. Remove and dispose of lamp.

Unexpected lamp rupture may cause injury, fire, or property damage

- Do not exceed rated voltage
- Do not use where directly exposed to water or outdoors without an enclosed fixture
- Use in enclosed fixture rated for this product—see instructions
- Do not use lamp if outer glass is scratched or broken
- Use only properly rated ballast
- Operate lamp only in specified position
- Turn lamp off at least once for 15 minutes per week
- Do not store flammable materials near/below lamp
- Do not use beyond rated life
- If used on a dimming system, see instructions
- Do not turn on lamp until fully installed

⚠ CAUTION

Risk of burn

- Allow lamp to cool before handling
- Do not turn on lamp until fully installed

Lamp may shatter and cause injury if broken

- Do not use lamp if outer glass is scratched or broken
- Dispose of lamp in a closed container
- Do not use excessive force when installing lamp

Notes

- ARC tube fill gas contains Kr85

123 – QMH S-rated Saf-T-Gard®

⚠ WARNING

Risk of electric shock

- Turn power off before inspection, installation or removal
- Do not use where directly exposed to water or outdoors without an enclosed fixture

Risk of fire

- Keep combustible materials away from lamp
- Use in fixture rated for this product

Unexpected lamp rupture may cause injury, fire, or property damage

- Do not exceed rated voltage
- Do not use where directly exposed to water or outdoors without an enclosed fixture
- Use in enclosed fixture rated for this product—see instructions
- Do not use lamp if outer glass is scratched or broken
- Use only properly rated ballast
- Operate lamp only in specified position
- Turn lamp off at least once for 15 minutes per week
- Do not store flammable materials near/below lamp
- Do not use beyond rated life
- Do not turn on lamp until fully installed

⚠ CAUTION

Risk of burn

- Allow lamp to cool before handling
- Do not turn on lamp until fully installed

Lamp may shatter and cause injury if broken

- Do not use lamp if outer glass is scratched or broken
- Dispose of lamp in a closed container
- Do not use excessive force when installing lamp

124 – Sport 1000W PAR64

⚠ WARNING

Risk of electric shock

- Turn power off before inspection, installation or removal
- Do not use where directly exposed to water or outdoors without an enclosed fixture

Risk of fire

- Keep combustible materials away from lamp
- Use in fixture rated for this product

A damaged lamp emits UV radiation which may cause eye/skin injury

- Turn power off if glass bulb is broken. Remove and dispose of lamp.

Unexpected lamp rupture may cause injury, fire, or property damage

- Do not exceed rated voltage
- Do not use where directly exposed to water or outdoors without an enclosed fixture
- Use in enclosed fixture rated for this product
- Do not use lamp if outer glass is scratched or broken
- Use only properly rated ballast
- Operate lamp only in specified position
- Turn lamp off at least once for 15 minutes per week
- Do not turn on lamp until fully installed

Warning and Caution Notices (continued)

⚠ CAUTION

Risk of burn

- Allow lamp to cool before handling
- Do not turn on lamp until fully installed

Lamp may shatter and cause injury if broken

- Wear safety glasses and gloves when handling lamp
- Do not use lamp if outer glass is scratched or broken
- Dispose of lamp in a closed container
- Do not use excessive force when installing lamp

Notes

- Operating position is beam horizontal ± 90° only.
- The PAR outer MUST be aligned to the "TOP" as indicated by the lamp marking.
- Burner pinch must be down in horizontal burn position.

125 – Sport MBIL-CSI-CID

⚠ WARNING

Risk of electric shock

- Turn power off before inspection, installation or removal
- Do not use where directly exposed to water or outdoors without an enclosed fixture

Risk of fire

- Keep combustible materials away from lamp
- Use in fixture rated for this product

Lamp emits UV radiation which may cause eye/skin injury

- Avoid exposure of eyes and skin to unshielded lamp

Unexpected lamp rupture may cause injury, fire, or property damage

- Do not exceed rated voltage
- Do not touch glass with bare hands
- Do not use where directly exposed to water or outdoors without an enclosed fixture
- Use in enclosed fixture rated for this product
- Do not use lamp if outer glass is scratched or broken
- Use only properly rated ballast
- Operate lamp only in specified position
- Turn lamp off at least once for 15 minutes per week
- Do not turn on lamp until fully installed

⚠ CAUTION

Risk of burn

- Allow lamp to cool before handling
- Do not turn on lamp until fully installed

Lamp may shatter and cause injury if broken

- Do not use lamp if outer glass is scratched or broken
- Do not use excessive force when installing lamp

Cross-Reference

GE Description	Osram/ Sylvania Description	Philips Description
Order This GE Lamp	If you currently use these lamps	
Standard & Ecolux® HPS Lamps		
Lucalox®	**Lumalux®**	**Ceramalux™**
LU35/MED	LU35/MED	C35S76/M
LU35/D/MED	LU35/D/MED	C35S76/D/M
LU50/MED/ECO	LU50/MED	C50S68/M
LU50/D/MED/ECO	LU50/D/MED	C50S68/M
LU50/H/ECO	LU50/ECO	C50S68/ALTO
LU50/D/H/ECO	LU50/D	C50S68/D
LU70/MED/ECO	LU70/MED	C70S62/M
LU70/D/MED/ECO	LU70/D/MED	C70S62/D/M
LU70/ECO/H/ECO	LU70/ECO	C70S62/ALTO
LU70/ECO/NC	LU70/PLUS/ECO	–
LU70/D/H/ECO	LU70/D	C70S62/D
LU100/MED/ECO	LU100/MED	C100S54/M
LU100/D/MED/ECO	LU100/D/MED	C100S54/D/M
LU100/H/ECO	LU100/ECO	C100S54/ALTO
LU100/ECO/NC	LU100/PLUS/ECO	–
LU100/D/H/ECO	LU100/D	C100S54/D
LU150/MED/ECO	LU150/55/MED	CC150S55/M
LU150/D/MED/ECO	LU150/55/D/MED	C150S55/D/M
LU150/55/H/ECO	LU150/55/ECO	C150S55/ALTO
LU150/ECO/NC	LU150/55/PLUS/ECO	–
LU150/55/D/H/ECO	LU150/55/D	C150S55/D
LU150/100/H/ECO	LU150/100	C150S56/ALTO
LU200/H/ECO	LU200/ECO	C200S66
LU200/ECO/NC	LU200/PLUS/ECO	–
LU250/H/ECO	LU250/ECO	C250S50
LU250/ECO/NC	LU250/PLUS/ECO	–
LU250/D/H/ECO	LU250/D	C250S50/D
LU310	LU310/ECO	C310S67
LU400/H/ECO	LU400/ECO	C400S51
LU400/ECO/NC	LU400/PLUS/ECO	–
LU400/D	LU400/D	C400S51/D
LU750	LU750	–
LU1000/ECO	LU1000	C1000S52
Deluxe High Pressure Sodium Lamps		
Lucalox®		**Ceramalux™**
LU70/DX/MED	–	C70S62/C/M
LU150/DX/MED	–	C150S55/C/M
LU150/55/DX	–	C150S55/C
LU250/DX	–	C250S50/C
LU400/DX	–	C400S51/C
Standby Longlife High Pressure Sodium Lamps		
Lucalox®	**Lumalux®**	**Ceramalux™**
LU70/SBY/XL	LU70/SBY	C70S62/2
LU100/SBY/XL	LU100/SBY	C100S54/2
LU150/55/SBY/XL	LU150/551SBY	C150S55/2
LU200/SBY/XL	LU200/100/SBY	–
LU250/SBY/XL	LU250/SBY	C250S50/2
LU400/SBY/XL	LU400/SBY	C400S51/2
LU1000/SBY/XL	LU1000/SBY	C1000S52/2
Ceramic Metal Halide Lamps		
CMH®	**Powerball®**	**MasterColor®**
CMH20/MR16/830/SP	–	–
CMH20/MR16/830/FL	–	–
CMH20/MR16/830/WFL	–	–
CMH39MR16/930/SP	–	–
CMH39MR16/930/FL	–	–
CMH39MR16/930/WFL	–	–
CMH39MR16/942/SP	–	–
CMH39MR16/942/FL	–	–
CMH39MR16/942/WFL	–	–
CMH20/PAR20/SP	–	–

GE Description	Osram/ Sylvania Description	Philips Description
Order This GE Lamp	If you currently use these lamps	
Ceramic Metal Halide Lamps (continued)		
CMH®	**Powerball®**	**MasterColor®**
CMH20/PAR20/FL	–	–
CMH20/PAR30/SP10	MCP20PAR30LN/U/830/SP	–
CMH20/PAR30/SP15	–	–
CMH20/PAR30/FL25	MCP20PAR30LN/U/830/FL	CDM20/PAR30/L/MFL/3K
CMH39/PAR20/830/SP10	MCP39PAR20/U/830/SP	CDM35/PAR20/M/SP3K
CMH39/PAR20/830/FL30	MCP39PAR20/U/830/FL	CDM35/PAR20/M/FL3K
CMH39/PAR20/NSP4K	–	CDM35/PAR20/M/SP/4K
CMH39/PAR20/FL4K	–	CDM35/PAR20/M/FL/4K
CMH39/PAR30L/830/SP10	MCP39PAR30LN/U/830/SP	CDM35/PAR30L/M/SP
CMH39/PAR30L/830/SP15	–	–
CMH39/PAR30L/830/FL25	MCP39PAR30LN/U/830/FL	CDM35/PAR30L/M/FL
CMH39/PAR30LNS4PK	–	–
CMH39/PAR30L/SP4K	–	–
CMH39/PAR30L/FL4K	–	–
CMH70/PAR30L/830/SP15	MCP70PAR30LN/U/830/SP	CDM70/PAR30L/M/SP
CMH70/PAR30L/830/FL40	MCP70PAR30LN/U/830/FL	CDM70/PAR30L/M/FL
CMH70/PAR38/830/SP15	MCP70PAR38/U/830/SP	CDM70/PAR38/SP/3K
CMH70/PAR38/830/FL25	MCP70PAR38/U/830/FL	CDM70/PAR38/FL/3K
CMH70/PAR38/830/WFL	MCP70PAR38/U/830/WFL	CDM70/PAR38/WFL/3K
CMH100/PAR38/830/SP15	MCP100PAR38/U/830/SP	CDM100/PAR38/SP/3K
CMH100/PAR38/830/FL25	MCP100PAR38/U/830/FL	CDM100/PAR38/FL/3K
CMH100/PAR38/830/WFL	MCP100PAR38/U/830/WFL	CDM100/PAR38/WFL/3K
CMH70/U/830/MED	MCP70/U/MED/830	MHC70/U/M/3K
CMH70/C/U/830/MED	MCP70/C/U/MED/830	MHC70/C/U/M/3K
CMH100/U/830/MED	MCP100/U/MED/830	MHC100/U/M/3K
CMH100/C/U/830/MED	MCP100/C/U/MED/830	MHC100/C/U/M/3K
CMH70/U/830/MED/O	MCP70/U/MED/830	MHC70/U/MP/3K/ALTO
CMH70/C/U/830/MED/O	MCP70/C/U/MED/830	MHC70/C/U/MP/3K/ALTO
CMH70/U/942/MED/O	MCP70/U/MED/940	MHC70/U/MP/4K/ALTO
CMH70/C/U/942/MED/O	MCP70/C/U/MED/940	MHC70/C/U/MP/4K/ALTO
CMH150/U/830/MED/O	MCP150/U/MED/830	MCH150/U/MP/3K/ALTO
CMH150/C/U/830/MED/O	MCP150/C/U/MED/830	MHC150/C/U/MP/3K/ALTO
CMH150/U/942/MED/O	–	MHC150/U/MP/4K/ALTO
CMH150/C/U/942/MED/O	–	MHC150/C/U/MP/4K/ALTO
CMH20/T/U/830/G12	–	–
CMH39/T/U/830/G12	MC39T6/U/G12/830	CDM35/T6/830
CMH39/TC/U/942/G12	MC39T6/U/G12/940	CDM35/T6/842
CMH70/T/U/830/G12	MC70T6/U/G12/830	CDM70/T6/830
CMH70/T/U/942/G12	MC70T6/U/G12/940	CDM70/T6/942
CMH150/T/U/830/G12	MC150T6/U/G12/830	CDM150/T6/830
CMH150/T/U/942/G12	MC150T6/U/G12/940	CDM150/T6/942
CMH70/TD/830/Rx7s	MC70T6/DE/830	CDM70/TD/830
CMH70/TD/942/Rx7s	–	CDM70/TD/942
CMH150/TD/830/Rx7s	MC150T6/DE/830	CDM150/TD/830
CMH150/TD/942/Rx7s	–	CDM150/TD/942
CMH250/V/PA/O	MCP250/PS/BU only	CDM250/V/O/PS/4K
CMH250C/V/PA/O	MCP250/C/PS/BU only	CDM250/C/V/O/PS/4K
CMH320/V/PA/O	MCP320/PS/BU only	CDM320/V/O/PS/4K
CMH320C/V/PA/O	MCP320/C/PS BU only	CDM320/C/V/O/PS/4K
CMH350/V/PA/O	–	CDM350/V/O/PS/4K
CMH350C/V/PA/O	–	CDM350/C/V/O/PS/4K
CMH400/V/PA/O	–	CDM400/V/O/PS/4K
CMH400C/V/PA/O	–	CDM400/C/V/O/PS/4K
CMH20/T/C/U/830/GU6.5	–	–
CMH39T/U930GU6.5	–	–
CMH39T/U942GU6.5	–	–
CMH20/TC/U/830/G8.5	MC20TC/U/G8.5/830	–
CMH39/TC/U/830/G8.5	MC39TC/U/G8.5/830	CDM35/TC/830
CMH39/TC/U/942/G8.5	MC39TC/U/G8.5/942	CDM35/TC/942
CMH70/TC/U/830/G8.5	MC70TC/U/G8.5/830	CDM70/TC/830
CMH70/TC/U/942/G8.5	MC70TC/U/G8.5/942	CDM70/TC/942
CMH250/U/830/R		CDM250S50/V/O/4K
CMH400/U/830/R		CDM400S51/V/O/4K

Cross-Reference (continued)

GE Description	Osram/ Sylvania Description	Philips Description
Order This GE Lamp	If you currently use these lamps	
Multi-Vapor® PulseArc® Metal Halide Lamps		
PulseArc®	**MetalArc®**	
MXR32C/VBU	–	–
MXR50/U/MED	MP50/U/MED	MH50/U/M
MXR50/C/U/MED	MP50/C/U/MED	MH50/C/U/M
MXR70/U/MED	MH70/U/MED	MHC70/U/M/3K
MXR70/C/U/MED	MH70/C/U/MED	MHC70/C/U/M/3K
MXR70/U/MED/O	MP70/U/MED	MHC70/C/U/M/3K
MXR70/C/U/MED/O	MP70/C/U/MED	MHC70/C/U/M/3K
MXR100/U/MED	M100/U/MRD	MHC100/U/M/3K
MXR100/C/U/MED	MH100/C/U/MED	MHC100/C/U/M/3K
MVR100/U/MED	MH100/U/4K/MED	MHC100/U/M/4K
MVR100/C/U/MED	–	MHC100/C/U/M/4K
MXR100/U/MED/O	MP100/U/MED	MHC100/U/M/3K
MXR100/C/U/MED/O	MP100/C/U/MED	MHC100/C/U/M/3K
MXR150/U/MED	M150/U/MED	MH150/U/M
MXR150/C/U/MED	M150/C/U/MED	MH150/C/U/M
MVR175/VBU/PA	MS175/PS/BU	MS175/BU/PS
MVR175/C/VBU/PA	MS175/C/PS/BU	–
MVR250/VBU/PA	MS250/PS/BU	MS250/BU/PS
MVR250/C/VBU/PA	MS250/C/PS/BU	–
MVR250/HOR/PA	M250/PS/U	–
MVR320/VBU/HO/PA	MS320/PS/BU	MS320/BU/PS
MVR320/C/VBU/HO/PA	MS320/C/PS/BU-HOR	MS320/C/BU/PS
MPR320/VBU/XHO/PA	MP320/350/PS/BU	MP320/BU/PS
MPR320/C/VBU/XHO/PA	MP320/350/C/PS/BU	MP320/C/BU/PS
MVR320/HOR/PA	M320/PS/BU-HOR	MS320/PS/U
MPR350/VBU/PA	MP320/350/PS/BU	MP350/BU/PS
MPR350/C/VBU/PA	MP320/350/C/PS/BU	MP350/C/BU/PS
MPR400/VBU/XHO/PA	MP350/400/PS/BU	MP400/BU/PS
MPR400/C/VBU/XHO/PA	MP350/400/C/PS/BU	MP400/C/BU/PS
MVR400/HOR/PA	M400/PS/U	MS400/HOR/PS
MVR400/HOR/ED28/PA	M400/PS/U/BT28	–
MVR750/VBU/PA	MS750/PS/BU-HOR/BT37	–
MVR750/C/VBU/PA	MS750/C/PS/BU-HOR/BT37	–
MVR1000/BT37/PA	M1000/PS/U/BT37	MS1000/BU/BT37/PS
Multi-Vapor® Standard Metal Halide Lamps		
Multi-Vapor®	**MetalArc®**	
MVR175/U/MED	M175/U/MED	MH175/U/M
MVR175/C/U/MED	M175/C/U/MED	MH175/C/U/M
MVR175/U	M175/U	MH175/U
MVR175/C/U	M175/C/U	MH175/C/U
MVR175/HOR	MS175/HOR	MS175/HOR
MVR175/C/HOR	MS175/C/HOR	MS175/C/HOR
MVR250/U	M250/U	MH250/U
MVR250/C/U	M250/C/U	MH250/C/U
MVR250/SP30/U	M2503K/BU-only	MH250/3K/BU
MVR250/HOR	MS250/HOR	MS250/HOR
MVR250/C/HOR	MS250/C/HOR	MS250/C/HOR
MVR400/U	M400/U	MH400/U
MVR400/C/U	M400/C/U	MH400/C/U
MVR400/SP30/U	MS400/BU	MH400/3K/U
MVR400/VBU	MS400/BU	MS400/BU
MVR400/VBD	MS400/BD	–
MVR400/C/VBU	MS400/C/BU	MS400/C/BU&
MVR400/C/VBD	MS400/C/BD	–
MVR400/HOR	MS400/HOR	MS400/HOR
MVR400/C/HOR	MS400/C/HOR	MS400/C/HOR
MVR400/SP30/HOR	MS400/3K/HOR	–
MPR400/U	MP400/BU	MP400/U
MPR400/VBU	MP400/BU/BD	–
MVR1000/U	M1000/U	MH1000/U
MVR1000/C/U	M1000/C/U	MH1000/C/U

GE Description	Osram/ Sylvania Description	Philips Description
Order This GE Lamp	If you currently use these lamps	
Multi-Vapor® Standard Metal Halide Lamps (continued)		
Multi-Vapor®	**MetalArc®**	
MVR1000/VBU	MS1000/BU	MS1000/BU
MPR1000/VBU/O	MP1000/BU	MP1000/BU
MVR1500/U/SPORTS	M1500/BU-HOR	MH1500BU
MVR250/HOR/PA	MS250/PS/U	–
MVR320/HOR/PA	MS320/PS/BV-HOR	MS320/PS/U
MVR400/HOR/ED28/PA	M400/PS/U/BT28	–
Safety Metal Halide Lamps		
MVT400/C/VBU	MPT400/C/BU	MHT400/C/U
Mercury Vapor Lamps		
HR40/50DX45-46	H45/46DL-40/50/DX	H46DL-40-50/DX
HR75DX43	H43AV-75/DX	H43AV-75/DX
HR100A38/A23	–	–
HR100DX38/A23	H38AV-100/DX	H38MP-100/DX
HR100A38	H38HT-100	H38HT-100
HR100DX38	H38JA-100/DX	H38JA-100/DX
HR100WDX38	H38JA-100/N	–
HR100RFL38	–	–
HR100RDXFL38	H38BP-100/DX	H38BP-100/DX
HR175A39	H39KB-175	H39KB-175
HR175DX39	H39KC-175/DX	H39KC-175/DX
HT175DX39	H39KC-T175/DX	H39KC-T175
HR175WDX39	H39KC-175/N	–
HR175RFL39	–	H39BM-175
HR175RDXFL39	H39BP-175/DX	H39BP-175/DX
HR250A37	H37KB-250	H37KB-250
HR250DX37	H37KC-250/DX	H37KC-250/DX
HR400A33	H33CD-400	H33CD-400
HR400DX33	H33GL-400/DX	H33GL-400/DX
HR400DX33BT	–	–
HT400DX33	H33GL-T400/DX	H33GL-T400/DX
HR400WDX33	H33GL-400/N	–
HR400RDX33	–	H33DN-400/DX
HR400RDXFL33	–	H33FS-400/DX
HR1000DX34	H34GW-1000/DX	H34GW-1000/DX
HR1000A36	H36GV-1000	H36GV-1000
HR1000DX36	H36GW-1000/DX	H36GW-1000/DX

For the most up-to-date product information, see www.gelighting.com.

Notes