SignComp™

Wall Mount Tension Frame and Covers

Part Number	Part	Length	Finish
2090	Wall Mount Tension Frame	24′-6″	Mill Finish
2088	Wall Mount Tension Frame Square Cover	24′-6″	Mill Finish
2089	Wall Mount Tension Frame Radius Cover	24′-6″	Mill Finish
2091	Wall Mount Tension Frame Beveled Cover	24′-6″	Mill Finish

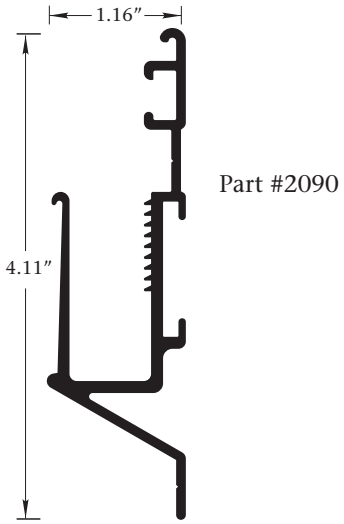

Part #2090

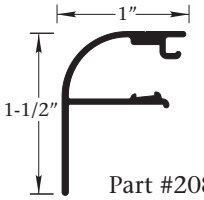

Part #2089

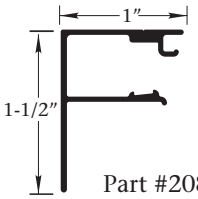

Part #2088

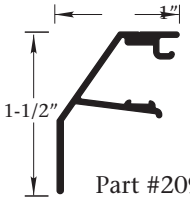

Part #2091

Features & Benefits

- Low profile system that will tension any size flexible face or banner material.
- Fully secured covers with recommended fasteners.
- (NOTE: Attach as recommended).
- All covers completely conceal the Wall Mount Tension Frame edges.
- Allows for conformity when mounting to walls with irregularities.
- Eliminates hemming, grommets, and double-faced tape.
- Affordable, easy to use, and re-usable.

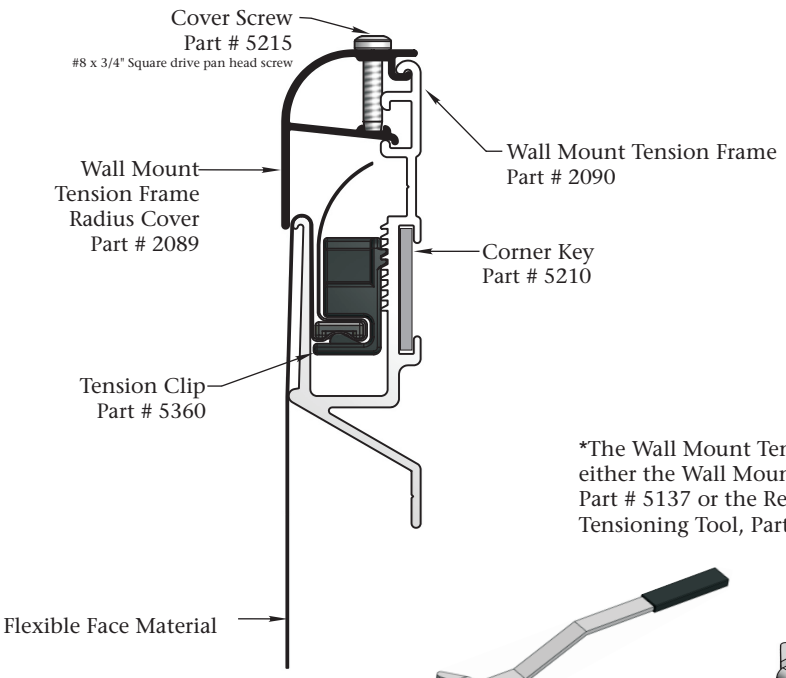

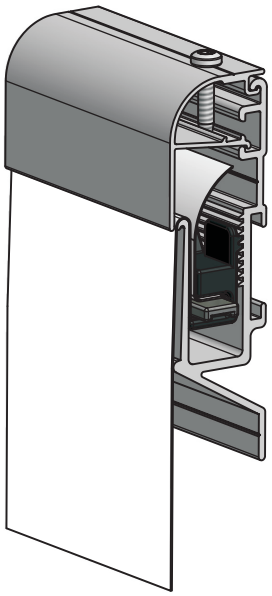

*The Wall Mount Tension Frame requires either the Wall Mount Tensioning Tool, Part # 5137 or the Reverse Wall Mount Tensioning Tool, Part # 5138.

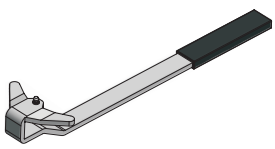

SignComp
2090/89

Wall Mount Tension Frame - Part #2090
Wall Mount Tension Frame Radius Cover - Part #2089
Kit Designation - K2090/89

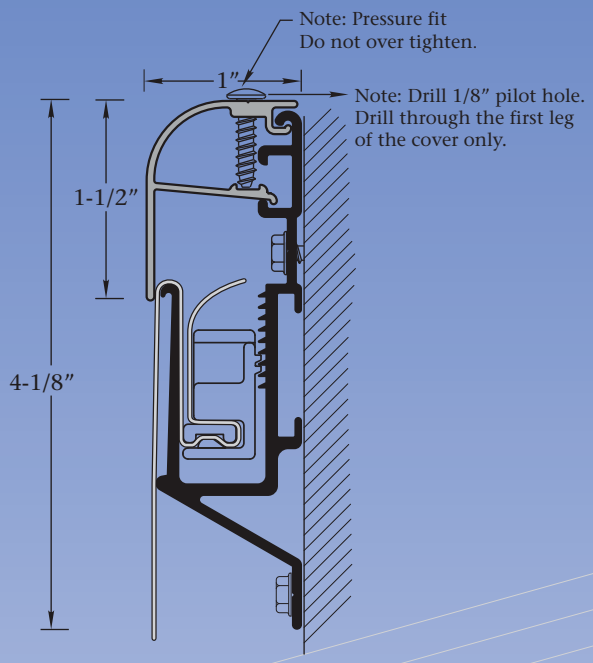

See page 13, 15 & 39 in the Gold Commercial Catalog for more details.

Features & Benefits

The Wall Mount Tension Frame will tension any size flexible face or banner material and only projects 1" off of the attached support structure. The Tension Clips are easy to use and are re-useable. Eliminates hemming, grommets and double faced tape.

Answers to FAQ's

- Accepts any flexible face material.
- Face material trim size - Add 2-1/4" of fabric to all four sides (adding a total of 4-1/2" to both the height and width) to establish the trimmed edge of the fabric.
- Tension Clip placement - Tension Clips are placed approximately 2-1/4" from the edge of the trimmed to size face material.
- Tension Clip spacing - Every 6" on center.
- Visible opening - 3" less than the overall frame height and width.
- The Reverse Wall Mount Tension Tool, Part #5138 and the Wall Mount Tension Tool, Part #5137 are designed to tension this frame.



Without Frame



With Frame





For further assistance please contact SignComp Customer Service
Toll Free (877) 784-0405 Phone (616) 784-0405 Fax (616) 784-0411 signcomp@signcomp.com www.signcomp.com