MAXBrite
LED LIGHTING TECHNOLOGY







LED CORN LIGHT

Premium Series

c UL us LISTED



100W LED Corn Light Bulb

- Replaces: 350W Metal Halide or HPS
- Luminous Flux: 12,000 lm
- Light Source: Samsung 5630 G2 LM561B
- Light Efficiency: 120lm/watt
- Input Voltage: 100-277V AC
- Cooling: Air Convection
- Mounting Base: E39 (mogul base)

- ***5 Year Limited Warranty***

DLC DLC QPL LISTED

© 2016 MaxBrite LED Lighting Technology - 1740-B Junction Ave. - San Jose, CA 95112 - Phone: 1-408-437-1600 - Fax: 1-408-437-1602 | www.maxbriteled.com

MAXBrite
LED LIGHTING TECHNOLOGY

Specifications:

Power Consumption	100W
Input Voltage	100-277V AC 50-60Hz (1A/100V 0.45A/220V 0.36A/277V)
Surge Protection	5.5kv
CCT	5,500K
Power Factor	>90%
Operating Temp.	-4° - +122°F (fahrenheit)
CRI	>80
Lumen	12,000lm
Light Source	Samsung 5630 G2
LED Quantity	280 LEDs
LED Lifespan	50,000 hours
Base	EX39 (mogul)
Estimated Savings*	$131.04/year

*Based on comparison to HPS/MH Fixture.
At $0.12/kwh and 12 runtime hours per day, 365 days per year.

Dimensions:

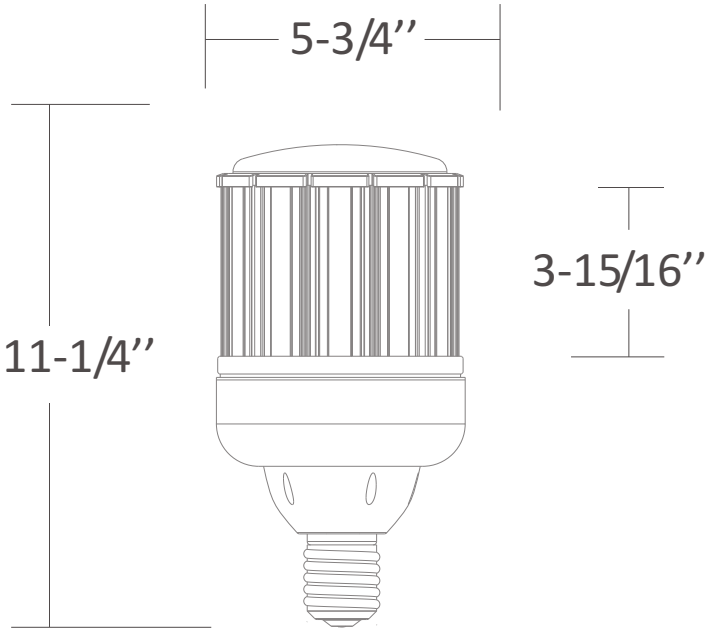

Applications:



High Bay Lamp

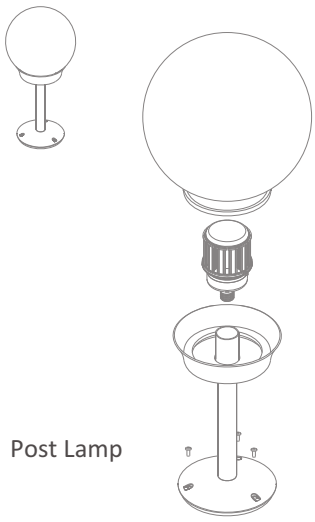

Post Lamp

Luminous Emittance:

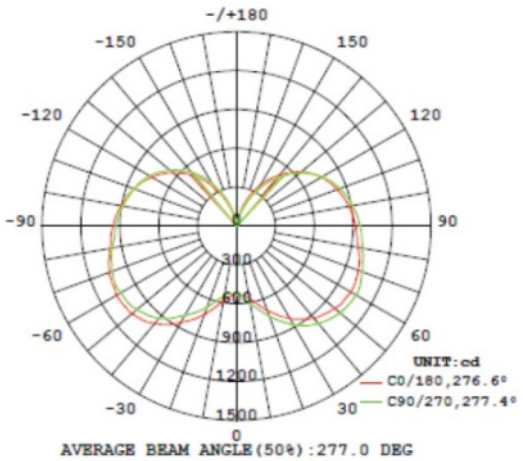

© 2016 MaxBrite LED Lighting Technology - 1740-B Junction Ave. - San Jose, CA 95112 - Phone: 1-408-437-1600 - Fax: 1-408-437-1602 | www.maxbriteled.com

MAXBrite
LED LIGHTING TECHNOLOGY



INSTALLATION INSTRUCTIONS

1. Be sure power is turned off.
2. If replacing an existing CFL, Metal Halide, or HPS bulb, remove existing bulb and rewire per diagram below.
3. Remove LED light from packaging and scew into socket.
4. For 80W-150W LED Corn Lights, use an aircraft cable (not included) through the plastic ''eye'' loop to secure the lamp to a permanent structure.

WARNINGS

- Turn off power before installation.
- This model does not support dimmers of any type.
- Do not use in areas with a humidity level above 85%
- If installed outdoors, avoid exposure to rain/water.
- Avoid touching the lamp while power is on.
- Do not stare directly at the illuminated corn light.
- This model is suited for open luminaires, and does not require a separate shield.
- The added weight of this light might cause instability of free-standing luminaires.
- Ensure your light fixture can support the weight of this LED light.

WIRING INFORMATION

MaxBrite Corn Light fixtures need to simply be install into an E26 (medium) or E39 (mogul) base with 100-277V AC input. When replacing an HID fixture with a previously installed ballast, bypass the ballast and wire directly into the fixture based as picture below.

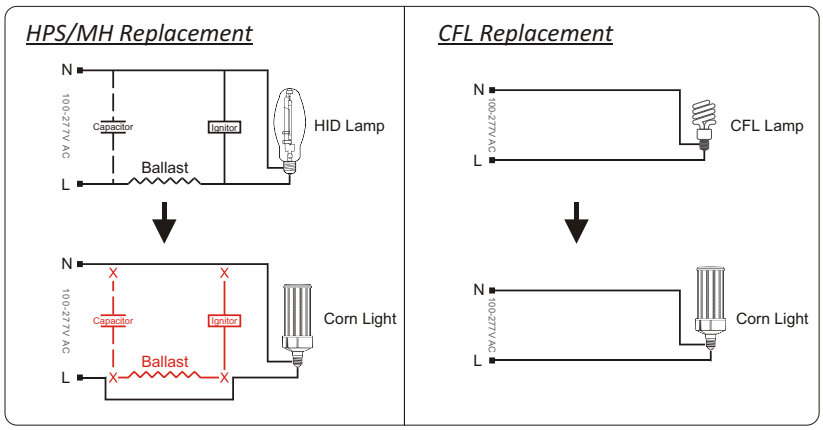

Note: Maxbrite Corn Light fixtures have an internal power supply that may not be used with a dimmer.

Product Limited Warranty

MaxBrite LED is dedicated to providing defect-free products that will give the buyer years of trouble free operation. These products offer high design standards and are the most thoroughly tested in the industry. All MaxBrite LED products maintain very strict quality assurance standards that are essential to customer requirements.

MaxBrite LED warranties its LED products and Power Supply products to meet the performance criteria outlined in the written data sheets and specifications. These products are guaranteed to be free from defects in materials and workmanship for the warranty period stated below, as long as the MaxBrite LED products and Power Supplies are used together as a system. If any LED product or Power Supply fails to perform, as specified during the warranty period in accordance with the terms and conditions set forth herein, MaxBrite LED will replace, or at its discretion, repair free of charge, the non-performing product on a pro-rata basis.

Terms and Conditions

Usage

This limited warranty is based on reasonable indoor or outdoor usage in architectural applications for image identification, when installed and used in accordance with instructions from MaxBrite LED. Normal operating conditions are defined as 24 hour per day, 7 day per week continuous use in typical outdoor heat and humidity environmental conditions. All LED systems, to varying degrees, have some amount of light degradation over the life of the product. MaxBrite LED designs all of its LED systems to minimize this light degradation but considers this a normal part of LED technology. This limited warranty is valid only when the LED products and Power Supplies are used together for their intended use and properly installed and wired in accordance with all instructions, building codes, the latest Underwriter Laboratory Standards of Safety, National Electric Code, Canadian Standards Association, and all other domestic and international safety agencies that are recognized as having applicable safety requirements. Any use outside intended use or conditions or the conditions stated in MaxBrite LED written data sheets and instruction, or stated herein, including the use of third party dimming, flashing or other effect devices, extreme environmental conditions or any other unintended usage will void this warranty. Replacement of MaxBrite LED products or Power Supplies with any other manufacturer's components will further void this warranty. After the first 36 months, the warranty is held on a pro-rata basis. The pro-rata formula is as follows: $\frac{P * T}{W}$

Where P = Current price, T = Remaining term in months, W = The original warranty period in months.

Examples:

An approved warranty claim is made within 36 months of purchase, with an original purchase price of $100, and a 5 year warranty. MaxBrite is responsible for 100% of the replacement cost since it is within 36 months of purchase.

If the same warranty claim is made with just 48 months remaining on the warranty, MaxBrite LED is responsible for $\frac{100 * 48}{60}$ = $80, and the buyer is responsible for the remaining $20 for the replacement.

The "date of purchase" refers to the date on your sales invoice. If you cannot find your sales invoice, the date will be calculated based on the date of manufacture which is determined by your product's serial number.

Warranty Claim Assistance

Should a MaxBrite LED product fail under this warranty please contact MaxBrite LED for a Return Material Authorization number (RMA). An RMA number may be obtained by calling customer service at (408) 437-1600. Information and troubleshooting assistance is also available at this number. Once an RMA number is obtained, the product should be returned directly to MaxBrite LED or the location designated at the time the RMA was issued. Product must be returned within 15 days of RMA issuance for the RMA to remain valid. Please mark all shipping boxes and packing slips with the RMA number. MaxBrite LED, at its sole discretion, may elect to provide replacement product prior to receipt of defective material. If such product is provided, user agrees to return to MaxBrite LED the defective product within 30 days of receipt of replacement. The Customer/Purchaser is responsible for all return shipping costs. Shipping costs are non-refundable. All returned merchandise must be sent back prepaid; we will not accept CODs. Please insure the package(s) for the full amount of the merchandise you are sending back to us. MaxBrite LED is not responsible for missing packages or missing items. Defective product is to be returned to the address listed as the return address on the shipping container. Failure to return defective product within specified time will result in user being charged for replacement product and will void all further warranty claims. Should circumstances arise that preclude the remedying of warranted defects by repair or replacement, MaxBrite LED shall, at its discretion and upon receipt and verification of defective product, refund to the buyer the purchase price or portion of purchase price theretofore paid to MaxBrite LED.

Limitation of Liability

High quality lighting products is the commitment of MaxBrite LED. By returning defective products it will help us monitor and further improve our product quality. Repair or replacement of product is the sole remedy available. UNDER NO CIRCUMSTANCE SHALL MAXBRITE LED BE LIABLE FOR ANY INCIDENTAL OR CONSEQUENTIAL LOSS OR DAMAGE WHATSOEVER ARISING OUT OF, OR IN ANY WAY RELATED TO ANY DEFECT IN OR NON PERFORMANCE OF THE PRODUCTS. NO WARRANTY OF MERCHANTABILITY OR FITNESS FOR A PARTICULAR PURPOSE IS MADE OR IMPLIED. Furthermore, MaxBrite LED shall not be responsible for any other costs, including installation or field support labor or loss of profits, income or revenue. Additionally, any drawing, layout, quotation or other communication regarding suggested product type, amount or usage is for reference only and should be treated as an estimate. MaxBrite LED shall not be responsible for minimum illumination levels or other performance criteria. MaxBrite LED reserves the right to test and examine all products returned under this warranty to evaluate proper usage, determine the cause of failure, and make a determination, in its sole judgment whether the products are defective and covered by this warranty.