OPERATION MANUAL

CUTTING PLOTTER

CFL-605RT

OPERATION MANUAL

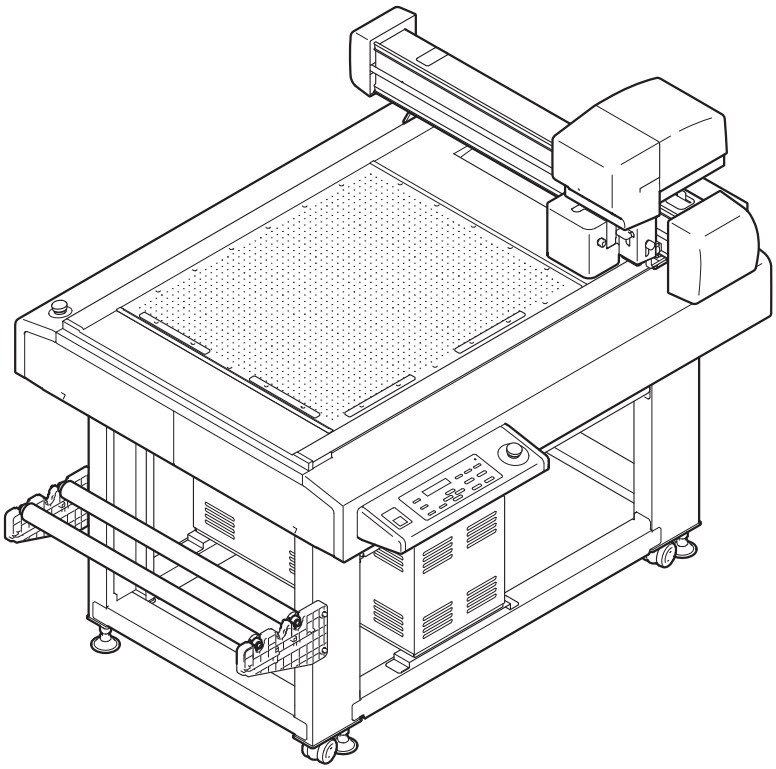

You can also download the latest manual from our website.

MIMAKI ENGINEERING CO., LTD.

URL: http://eng.mimaki.co.jp/

D202786-13

Original instructions

TABLE OF CONTENS

CAUTION vii
CAUTION vii
FCC Statement (USA) & EN55022 (Europe) vii
Interference to televisions and radios vii
Introduction viii
On This Operation Manual viii
Accessories viii
Safety Precautions ix
Symbols ix
Warning labels xii

Chapter 1 Setup

Installation 1-2
Names and Functions of Parts 1-4
Main Unit 1-4
Head 1-5
Operation Panel 1-6
Cable Connections 1-7
Connecting the Power Cable 1-7
Connecting the Interface Cable 1-7
Emergency Stop 1-8
Applying an Emergency Stop 1-8
Resetting an Emergency Stop 1-8
Preparing the Cutting Panel 1-9
Attach the felt mat 1-9
Inserting the Set Guide Plates 1-9
Blades and Workpieces 1-10
Workpiece Types that Can be Cut (Guide) 1-10
Blade Types that Can Be Used 1-10
Mounting Tools 1-11
Mounting the Pen or Swivel Blade 1-11
Mounting the Tangential Cutter 1-14
Mounting the Grid Roller 1-16
Mounting the Reciprocating Cutter 1-17
Attach the Work Holder 1-19
Local Status / Remote Status 1-20
Local Status and Displays 1-20
Remote Status and Displays 1-20
Matching the PC Specifications 1-22
Setting the Command Origin 1-22

Matching the Plotter Specifications 1-23
Setting Automatic Head Retraction 1-24
Setting the Vacuum 1-25
Enabling / Disabling the Vacuum Automatic OFF Function 1-25

Chpater 2 Basic Operations

Basic Operation Workflow 2-2
Turning the Power ON 2-3
Moving the Head 2-4
Moving the Head Using the Head Retraction [VIEW] Function 2-4
Moving the Head Using the Jog Keys 2-5
Fixing the Workpiece 2-6
Fixing the Workpiece with Adhesive Tape 2-6
Fixing the Workpiece by Vacuum Adhesion 2-7
Method of fixing the sponge 2-9
Selecting Tools 2-10
Select the tool condition 2-10
Set Items 2-11
Adjusting the Blade to Match the Workpiece 2-14
Adjusting the tial Cutter 2-14
Adjusting the Swivel Blade 2-16
Making a Test Cut 2-17
Checking the Tool Status 2-18
Checking the Status Between Tools 2-20
Setting the Drawing Origin 2-23
Cutting (Drawing) 2-24
Effective Cutting Area 2-24
Cutting (Drawing) 2-24
Interrupting Processing 2-25
Restarting Processing 2-25
Interrupting Processing (Data Clear) 2-26
Turning the Power OFF 2-27

Chapter 3 Useful Function

List of SET UP Functions 3-2
Functions in the Jog Mode 3-5
- Setting the origin 3-5
- Two-point axis alignment 3-6
- Cutting area 3-7
- Digitization operation 3-8

Assigning Pen Numbers 3-9
Cutting the Same Data Again (Copy) 3-11
Setting Multi-pass Cutting 3-12
- Setting Multi-pass Cutting 3-12

Change the cutting (plotting) order 3-14
- Set SORTING 3-14

Rotating Coordinate Axes (ROTATE) 3-15
Setting the Cutter Stroke 3-16
Setting the Displayed Units 3-17
Swivel Blade Dummy Cut 3-18
Setting the Displayed Language (DISPLAY) 3-19
Setting the Close Time 3-20
Other Useful Functions 3-21
- Setting a Cut Quality 3-21
- Setting speed of carriage movement 3-22
- Height setting at the pen tool lifted 3-23
- Setting of the offset value of the cutting edge correction pressure 3-24
- Make the media without uncut area 3-25
- Setting a KEY BUZZER 3-26
- Setting a START MODE 3-27
- Setting a JOG SETTING 3-28
- Setting a COMMAND 3-29
- Set the configurations with a computer 3-32
- Set the network 3-34
- Setting event mail function 3-36
- Copy the set value from the other user setting 3-45
- Reset the setting values to the initial state. 3-46

Switch the User 3-47

Chapter 4 Register Mark Reading Functions

Precautions when Creating Data with Register Marks 4-2
- Size of Register Marks 4-2
- Permitted Arrangements of Register Marks and the Design 4-3
- Prohibited Drawing Areas around Register Marks ... 4-3
- Guide to Register Mark Separation and Register Mark Size 4-5
- Register Mark Colors 4-6
- Bleeding or Smudging of Register Marks 4-6

Setting Register Mark Detection 4-7
- Precautions Related to Register Mark Detection 4-7
- Setting Register Mark Detection 4-9

Detecting Register Marks 4-10
- Using the Light Pointer to Check the Workpiece Tilt 4-10
- Setting height of register mark 4-11
- Register Mark Detection Procedure 4-12

Continuous Cutting of Register Marks 4-13

Confirm the following when failed in cutting correctly 4-14
- Alignment of MARK SENSOR 4-14
- Check the sensor for the registration mark detection 4-16
- Correct the light pointer position 4-19
- Setting of the back side cut offset 4-20

Chapter 5 Daily Maintenance

Daily Maintenance 5-2
- Cutting Panel Surface 5-2
- Covers 5-2
- Care of the cutter blade 5-2
- Unit B 5-3
- Cleaning the Vacuum Filter 5-4
- Cleaning the Register Mark Sensor 5-5

Supplied items 5-6

Chapter 6 Troubleshooting

Now What Do I Do? 6-2
Adjusting the Tools 6-3
Adjusting the Cutter 6-3
Circle θ Correction 6-11
Troubleshooting 6-14
Unit does not operate when the power is turned ON 6-14
Unit does not operate after the CAD data is sent 6-14
An error occurs when the data is sent 6-14
Tool lifts up the paper 6-15
Drawn lines are broken or smudged 6-15
No reciprocating movement 6-15
Problems Causing an Error Display 6-16
Non-fatal Errors 6-16
Status message 6-19
Sample Cut 6-20
Perform SAMPLE CUT to Find out the Cause of Cutting Error. 6-21
CFL-605RT Specifications 6-23

CAUTION

DISCLAIMER OF WARRANTY : THIS LIMITED WARRANTY OF MIMAKI SHALL BE THE SOLE AND EXCLUSIVE WARRANTY AND IS IN LIEU OF ALL OTHER WARRANTIES,EXPRESS OR IMPLIED, INCLUDING, BUT NOT LIMITED TO, ANY IMPLIED WARRANTY OF MERCHANTABILITY OR FITNESS, AND MIMAKI NEITHER ASSUMES NOR AUTHORIZES DEALER TO ASSUME FOR IT ANY OTHER OBLIGATION OR LIABILITY OR MAKE ANY OTHER WARRANTY OR MAKE ANY OTHER WARRANTY IN CONNECTION WITH ANY PRODUCT WITHOUT MIMAKI'S PRIOR WRITTEN CONSENT. IN NO EVENT SHALL MIMAKI BE LIABLE FOR SPECIAL, INCIDENTAL OR CONSEQUENTIAL DAMAGES OR FOR LOSS OF PROFITS OF DEALER OR CUSTOMERS OF ANY PRODUCT.

FCC Statement (USA) & EN55022 (Europe)

This equipment has been tested and found to comply with the limits for a Class A digital device, pursuant to Part 15 of the FCC Rules. These limits are designed to provide reasonable protection against harmful interference when the equipment is operated in a commercial environment. This equipment generates, uses and can radiate radio frequency energy and, if not installed and used in accordance with the Operation manual, may cause harmful interference to radio communications.
Operation of this equipment in a residential area is likely to cause harmful interference in which case the user will be required to correct the interference at his own expense.
In the case where MIMAKI-recommended cable is not used for connection of this device, limits provided by FCC rules can be exceeded.
To prevent this, use of MIMAKI-recommended cable is essential for the connection of this plotter.

Interference to televisions and radios

The product described in this manual generates high frequency when operating.
The product can interfere with radios and televisions if set up or commissioned under improper conditions.
The product is not guaranteed against any damage to specific-purpose radio and televisions.
The productfs interference with your radio or television will be checked by turning on/off the power switch of the product.
In the event that the product is the cause of interference, try to eliminate it by taking one of the following corrective measures or taking some of them in combination.

- Change the orientation of the antenna of the television set or radio to find a position without reception difficulty.
- Separate the television set or radio from this product.
- Plug the power cord of this product into an outlet which is isolated from power circuits connected to the television set or radio.

Thank you for purchasing a CFL-605RT Flatbed Cutting Plotter.

This manual describes the CFL-605RT.

Carefully read this manual and then store it in a place where it can be easily reached.

On This Operation Manual

- This manual describes the operation and maintenance of the CFL-605RT es Flatbed Cutting Plotter ("the unit").
- Carefully read this manual and then store it in a place where it can be easily reached.
- Ensure that this manual reaches the person using the unit.
- Every care was taken when writing this manual. Please contact your Mimaki representative if you discover any problems in the manual.
- We reserve the right to change this manual at any time, without notice.
- If this manual becomes unreadable due to fire or other damage, contact your Mimaki representative to purchase a new copy.



- This unit uses sharp blades. It can be extremely dangerous during operation. Never put your face or hands near the machine head. There is a risk of injury.

Accessories

Confirm the accessories supplied against the separate “ACCESSORIES”.
Contact your Mimaki representative immediately if anything is broken or missing.

Reproduction of this manual is strictly prohibited.
© MIMAKI ENGINEERING CO., LTD
All Rights Reserved.Copyright

Symbols

Symbols are used in this Operation Manual for safe operation and for prevention of damage to the machine.
The indicated sign is different depending on the content of caution.
Symbols and their meanings are given below. Please follow these instructions as you read this manual.

Examples of symbols

	Meaning
	Failure to observe the instructions given with this symbol can result in death or serious injuries to personnel. Be sure to read it carefully and use it properly.
	Failure to observe the instructions given with this symbol can result in injuries to personnel or damage to property.
	Important notes in use of this machine are given with this symbol. Understand the notes thoroughly to operate the machine properly.
	Useful information is given with this symbol. Refer to the information to operate the machine properly.
	Indicates the reference page for related contents.
	The symbol " △ " indicates that the instructions must be observed as strictly as the CAUTION instructions (including DANGER and WARNING instructions). A sign representing a precaution (the sign shown at left warns of hazardous voltage) is shown in the triangle.
	The symbol " ⃠ " indicates that the action shown is prohibited. A sign representing a prohibited action (the sign shown at left prohibits disassembly) is shown in or around the circle.
	The symbol " ● " indicates that the action shown must be taken without fail or the instructions must be observed without fail. A sign representing a particular instruction (the sign shown at left instructs to unplug the cable from the wall outlet) is shown in the circle.

WARNING

Do not disassemble or remodel the device



- Never disassemble or remodel the main unit of the plotter and the blower unit. Disassembling/ remodeling any of them will result in electric shocks or breakdown of the device.

Do not use the device in damp places



- Avoid damp environments when putting the device into service. Do not splash water onto the device.
  High-humidity or water will give rise to fire, electric shocks or breakdown of the device.

Abnormal event occurs



- If the device is used under an abnormal condition where the device produces smoke or unpleasant smell, fire or electric shocks can result. Be sure to turn off the power switch immediately and detach the plug from the receptacle. Check first to be sure that the device no longer produces smoke, and contact a distributor in your district or MIMAKI office for repair. Never repair your device by yourself since it is very dangerous for you to do so.

Leave maintenance to a serviceman



- Leave maintenance works to a serviceman whenever the device has broken. Never conduct maintenance works by yourself since the works are always accompanied by possible risks of electric shocks, etc.

Handling of the power cable



- Use a power cable attached to this unit.
- Take care not to damage, break or work on the power cable.If a heavy matter is placed on the power cable, heated or drawn, the power cable can break to cause fire or electric shocks.B

Preventive measure against dust



- When handling any dust-producing substance that will jeopardize the health of personnel, wear a mask or the like to prevent dust.

Handling of the cable



- Take care not to damage, break or work on the power cable or communication cable. If a heavy matter is placed on the power cable, heated or drawn, the power cable can break to cause fire or electric shocks.

Handling of tools



- Store cutter holders or blades in a place that is out of the reach of children. Never place cutter holders or blades in the tray on the operation panel.

Power supply and voltage



- This unit contains parts applied high voltage.Carrying out electrical work by those unauthorized for that work is prohibited.



- To prevent electrical shock, be sure to set OFF the main power circuit breaker and disconnect the power plug before carrying out maintenance.For some units, capacitors may take one minute for discharging; therefore, start maintenance work three minutes after setting OFF the main power circuit breaker and disconnecting the power plug.
- Be sure to carry out grounding work to prevent electrical shock.
- Use the unit under the power specifications given.Be sure to connect the power cable plug to a convenient outlet grounded, or fire or electric shock might occur.or it may cause electrical shock.



- The main power circuit breaker should be set ON only by personnel with sufficient knowledge about operations of this unit.

Grounding connection



- For this device, grounding connection is needed for prevention of an electric shock.
- Be sure to carry out grounding work.

Handling if grease



- If you get grease in your eyes, immediately flush with water for at least 15 minutes. Get medical attention.
- If grease settles on the skin or clothes, after wipe well, wash thoroughly with soap and water.
- If you inhale a lot of vapor and feel bad, move to a fresh air location and cover with a blanket to keep warm. Lie quietly and receive medical attention.
- If anyone drinks grease by mistake, without induce vomiting, immediately consult a physician.
- Use powder, carbon dioxide, dry sand for an initial fire. Block out the air and oxygen using a foam fire extinguisher for large-scale fire. Evacuate the people other than the person concerned to a safe place.
- Water injection in some cases is dangerous to expand the fire. Please do not use water to extinguish fire.
- Fire-fighters to wear protective equipment. Work on fire extinguishing from the windward.

For safe operation

⚠ CAUTION

Do not restart the power until 30 seconds after turn off



• If the device is restarted, do not turn on the power until 30 seconds after turning off.
The device may be caused faulty function.

Do not put any matters on the cable



• Do not bend the power cable and the communication cable, and do not placed any matters. These cables may be broken and heated, the power cable can cause fire or electric shocks.

Do not climb on top of the machine



• Please do not climb on top of the machine. It may cause malfunction.

Do not move your face in front of cut panel



• Do not move your face and hands in front of the cut panel while the unit is working.
The device can wind and touch your hairs or hands.

Do not dress baggy suits and accessories



• Do not work with dressing baggy suits and any accessories, and also tie any long hairs.

The device is moved by our service engineer only



• The device is too sensitive equipment, so in case if you require movement of the unit, please contact to our service engineer.

Precautions in installation

⚠ CAUTION

A place exposed to direct sunlight



• Do not install the device at a place where the temperature of the cut panel surface exceeds 60?C. The cut panel can deform or break down.

A place that vibrates



• The device will fail to give correct results if installed in a place that vibrates.

A place in which temperature and humidity



• Use the device under the following environment.
Operating environment:
10 to 35 C
35 to 75 % (Rh)

A place filled with dirt, dust or tobacco smoke



• The plotter is a precision machine.
Do not use it in a place that is filled with dirt and dust.

A plate that is not horizontal



• If the plotter is not leveled, the plotter will fail to give correct results. Also the tilted plotter can break.

Near flammable materials



• When the blower is used fully open, the exhaust port temperature becomes extremely high. Do not place flammable materials near the blower or in front of the exhaust port.

A place exposed to direct air blow from air conditioner., etc



• Cutting quality could be adversely affected.

Warning labels

Warning labels are stuck on the printer body. Be sure to fully understand the warning given on the labels.
If a warning label is illegible due to stains or has come off, purchase a new one from your local distributor or our office.

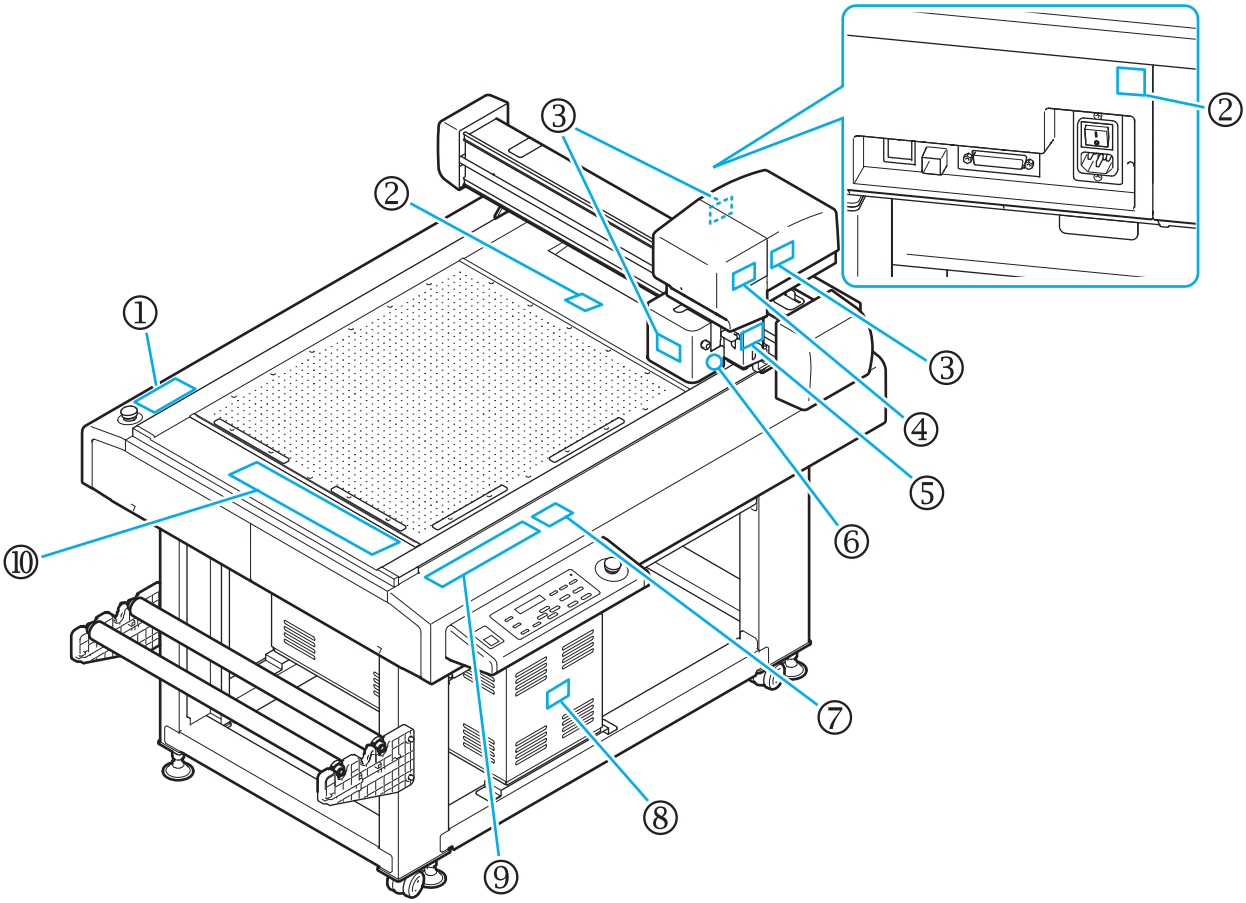

①Order No.M902667



②Order No.M907935



③Order No.M905694



④Order No.M911958

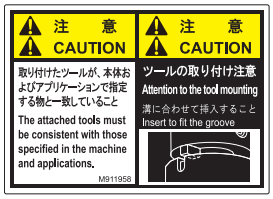

⑤Order No.M912059



⑥Order No.M901229



⑦Order No.M911983

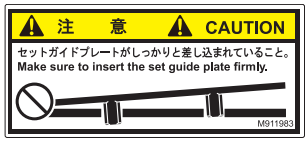

⑧Order No.M903239



⑨Order No.M906115



⑩Order No.M902663



Chapter 1
Setup



This Section....

... describes the setup operations required to connect the unit to a PC after unpacking it.

Installation 1-2
Names and Functions of Parts 1-4
Main Unit 1-4
Head 1-5
Operation Panel 1-6
Cable Connections 1-7
Connecting the Power Cable 1-7
Connecting the Interface Cable 1-7
Emergency Stop 1-8
Applying an Emergency Stop 1-8
Resetting an Emergency Stop 1-8
Preparing the Cutting Panel 1-9
Attach the felt mat 1-9
Inserting the Set Guide Plates 1-9
Blades and Workpieces 1-10
Workpiece Types that Can be Cut (Guide) 1-10
Blade Types that Can Be Used 1-10
Mounting Tools 1-11
Mounting the Pen or Swivel Blade 1-11
Mounting the Tangential Cutter 1-14
Mounting the Grid Roller 1-16
Mounting the Reciprocating Cutter 1-17
Attach the Work Holder 1-19
Local Status / Remote Status 1-20
Local Status and Displays 1-20
Remote Status and Displays 1-20
Matching the PC Specifications 1-22
Setting the Command Origin 1-22
Matching the Plotter Specifications 1-23
Setting Automatic Head Retraction 1-24
Setting the Vacuum 1-25
Enabling / Disabling the Vacuum Automatic OFF Function 1-25

Installation

Install the unit in a location where the following installation space is available.



- Allow no objects inside the installation space. These may cause you to trip.

Model	Width	Depth	Height	Total weight
CFL-605RT	1,310 mm	1,030 mm	1,100 mm	Less than 109 kg

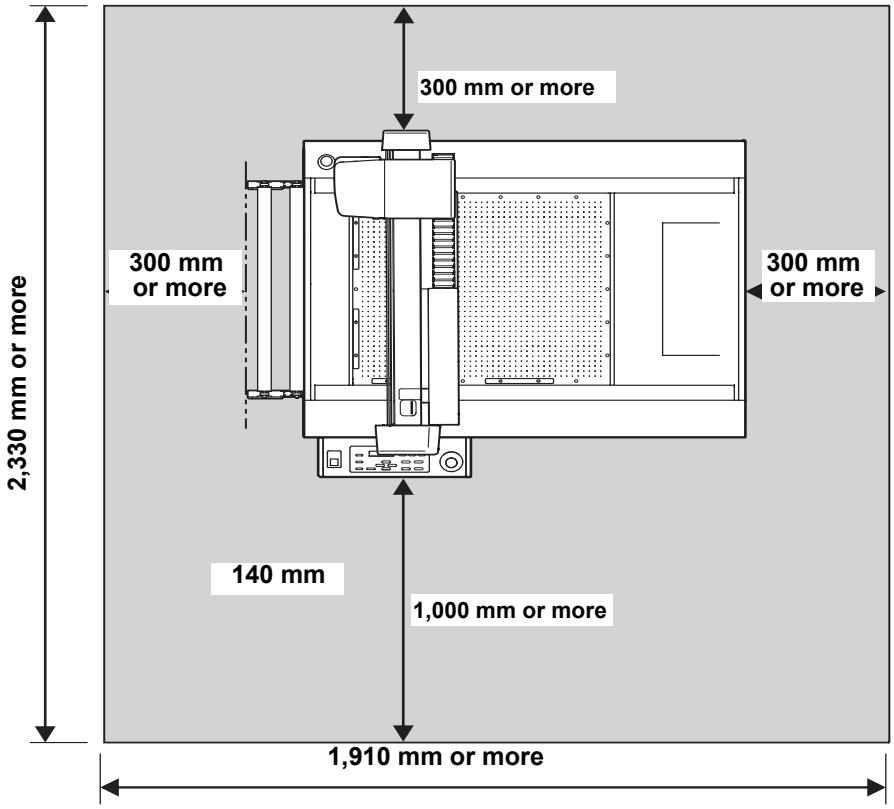

Moving This Machine

Move this machine according to the following steps when this machine needs to be moved on the same step-free floor.

Important!

- When the machine is moved to any place other than on the same step-free floor, contact your distributor or our service office.
  If you move it by yourself, failure or damage may occur.
  Be sure to request your distributor or our service office to move this machine.

Caution

- When moving this machine, take care that it does not receive a significant impact.
- Be sure to lock the caster after moving of this machine.

1 **Raise the adjuster foot, thereby grounding the caster**

2 **Release the lock of caster.**

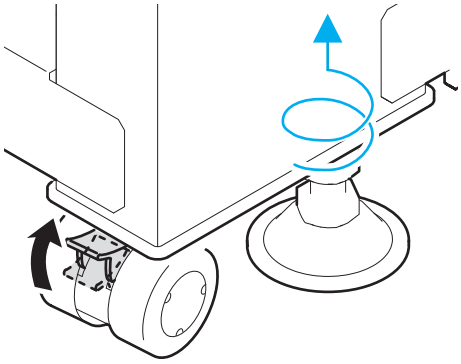

3 **Move this machine as shown in the figure.**

- Move the machine by pressing ▽ mark at the machine side cover.
- If you move by pressing the location other than ▽ mark, the cover may be broken.

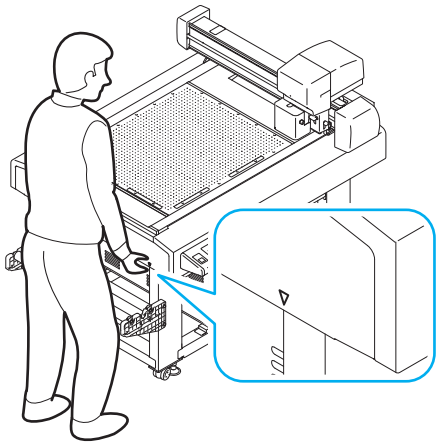

4 **Lock the caster.**

5 **Lower the adjuster foot to perform a leveling of the machine**

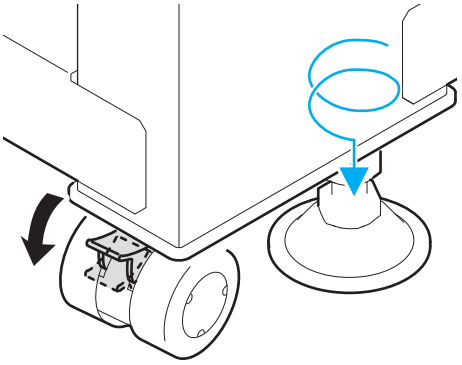

Main Unit

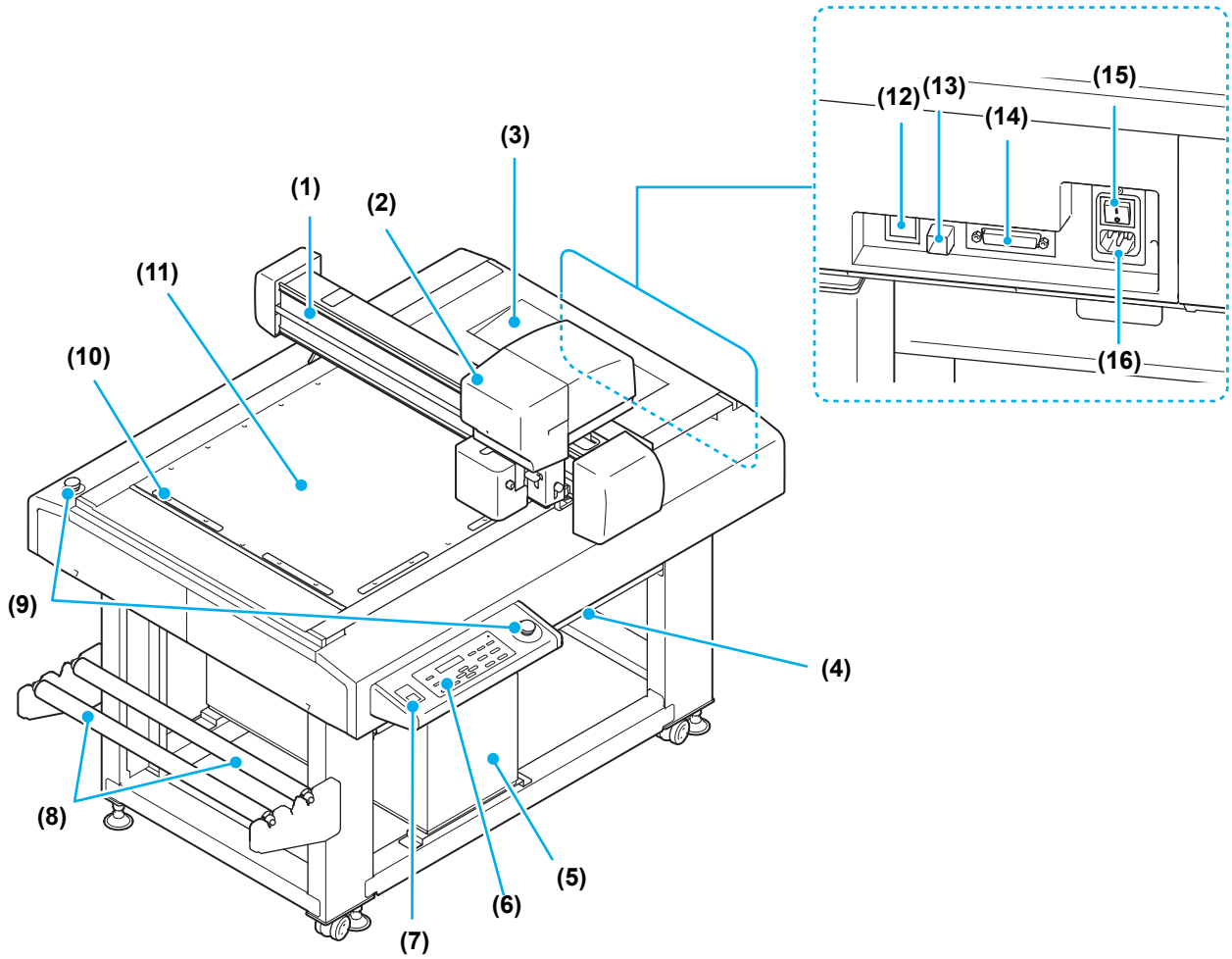

	Name	Function
(1)	Y bar	Moves the head in the Y direction.
(2)	Head	Holds a variety of tools. The mountable tool depends on the head.
(3)	Tray	Small tools, such as a retractable knife and other cutters, can be placed on.
(4)	Table	Can put temporarily the workpiece and finished product.
(5)	Vacuum Unit	Provides vacuum adhesion of the workpiece on the cutting panel.
(6)	Operation panel	Makes the settings required for the unit. (☞ P.1-6)
(7)	Power switch	Turns the unit power ON / OFF.
(8)	Roll bar	Set the roll of adsorption sheet on top of the two bars. (☞ P.2-9)
(9)	EMERGENCY switch	Press in the event of an emergency. The power is forcibly cut to stop unit operation.
(10)	Set guide plates	Guides for mounting the workpiece. (☞ P.1-9)
(11)	Cutting panel / Felt mat	Holds the workpiece. It offers a regular array of small holes for vacuum adhesion. (☞ P.1-9)
(12)	LAN connector	LAN interface connector (☞ P.1-7)
(13)	USB interface	USB 2.0 interface connector (☞ P.1-7)
(14)	RS-232C interface	RS-232C interface connector (☞ P.1-7)
(15)	Main power switch	Turns the unit power ON / OFF. Normally, leave ON. Turn OFF when doing maintenance.
(16)	Power inlet	Connector for the plotter power cable.

Head

Front

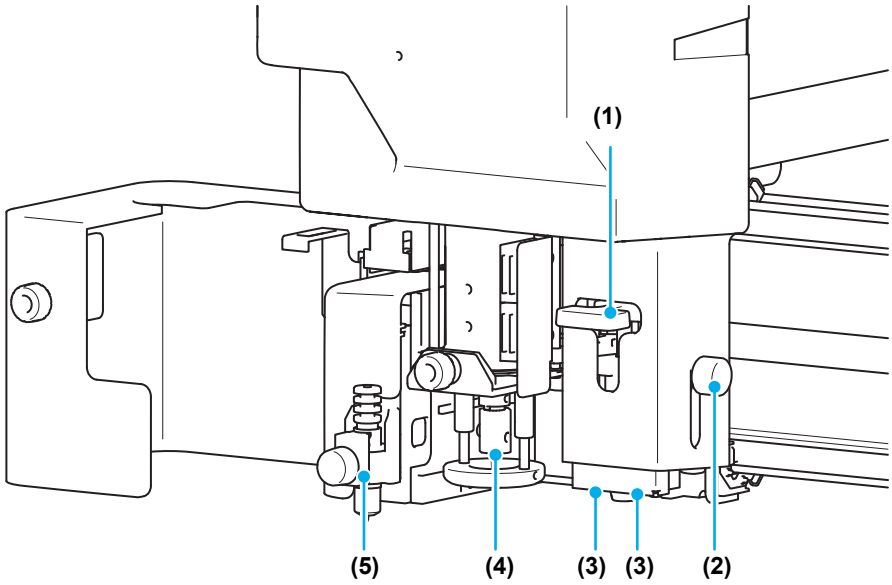

	Name	Function
(1)	Register mark height adjustment lever	Used adjust the reading height of mark sensor. (☞ P.4-11)
(2)	Register mark height fixing screw	Used adjust the reading height of mark sensor. ?☞ P.4-11)
(3)	Register mark sensor / Light pointer	Sensor to detect register marks. Used for positioning to read register marks.
(4)	Unit B	Mounts the reciprocating cutter holder. (☞ P.1-16)
(5)	Unit A	Holds the pen and swivel blade. (☞ P.1-11)

Operation Panel

VACUUM key

Turns vacuum adhesion of the workpiece on (☞ P.2-7).

VIEW key

The head is saved to the set location.
When pressed during jog, can set the axis alignment(☞ P.3-6).

COPY key

Re-cut the data once cut in the offline state

TEST key

Execute a test cut.

TOOL key

Change the tool and set the cut conditions.

DATA CLEAR key

Execute the data clear.

POWER lamp

The green lamp lights when the unit power is ON.

Display

Displays the unit status and setup menus.

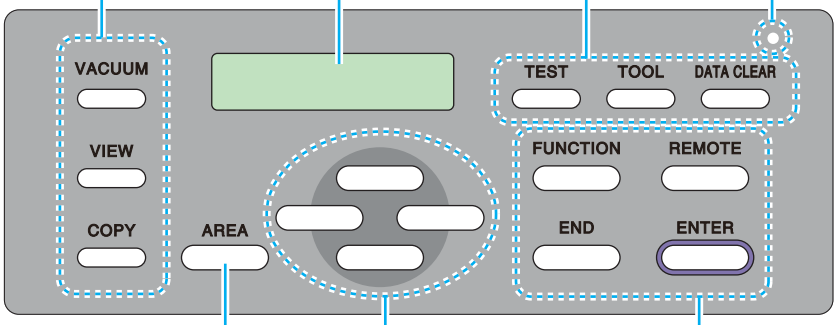

Jog keys

Move the head in the direction of the arrow, when the local menu is displayed.

AREA key

Can check the cut area that was set during Local.
When pressed during jog, can set the cut area.

FUNCTION keys

Select functions on the local menu and set values.

END key

Cancels a selection (clears data, copying, etc.) or reverts to the previous level without saving entered values.

REMOTE key

Switches the unit between the remote status and local status.

ENTER key

Saves the entered values.

Warning

- Turn OFF (☞ P.2-27) the power before connecting the vacuum signal cable, RS-232C interface cable, or USB interface cable. Failure to turn off the power may result in electric shocks or damage to the unit.

Connecting the Power Cable

After connecting the interface cable, you must connect the power cable. Connect the power cable with the plug outlet of the following power specifications.

- Voltage : AC100 - 240V ± 10%
- Frequency : 50/60Hz

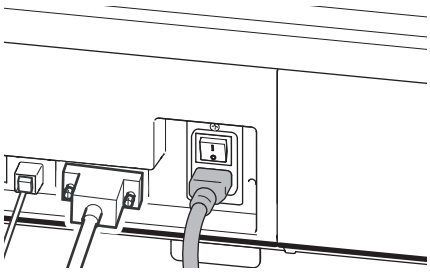

Caution

- If use in Japan, use at single-phase 100V - 120V.
  If use at single-phase AC200V, please consult your service engineer.

Caution

- **Be sure to connect the ground wire.**
- Using without the ground wire causes the damage of this device and electric shock that may be very dangerous.

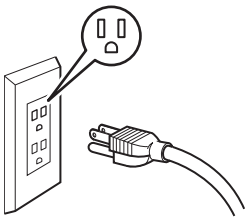

- **Regarding the use of two polar plug outlet, you must connect the auxiliary ground adapter to the plug of power cable.**
- Earth the green wire (ground wire) of the ground adapter. If you cannot, consult with an electrician.

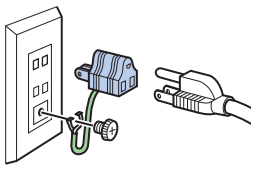

Connecting the Interface Cable

The unit offers an RS-232C interface and USB interface as standard.
Use an RS-232C interface cable recommended by Mimaki or one that suits the PC you are using.

● Turn off the plotter and PC before connecting the RS-232C interface cable.

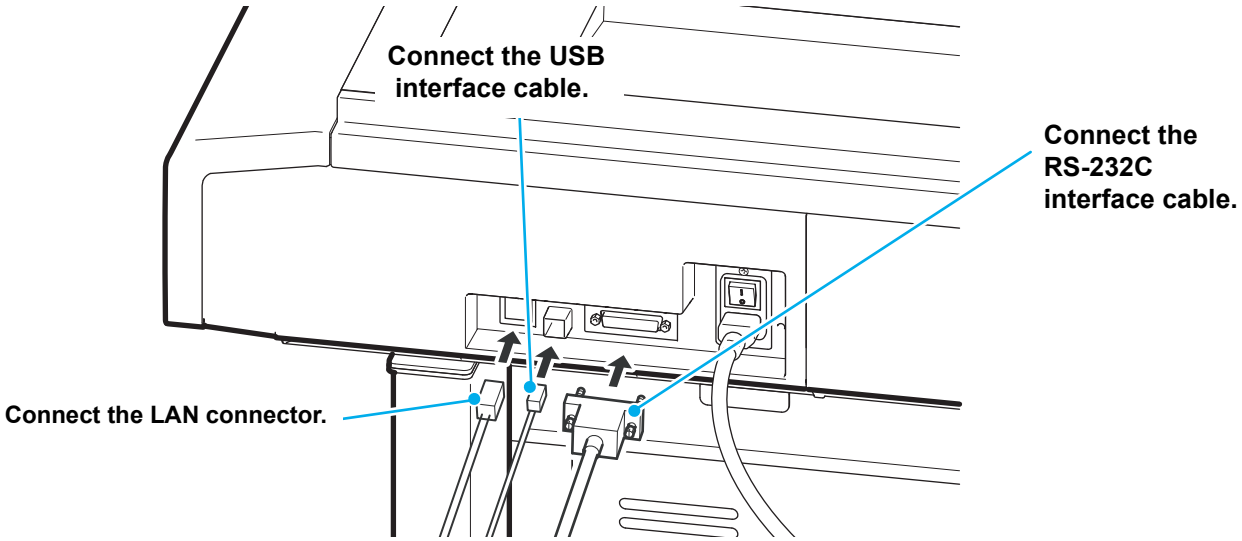

Emergency Stop

The emergency stop is used when an emergency situation arises.
EMERGENCY switch is located in two places in the key panel section and rear of the unit respectively.

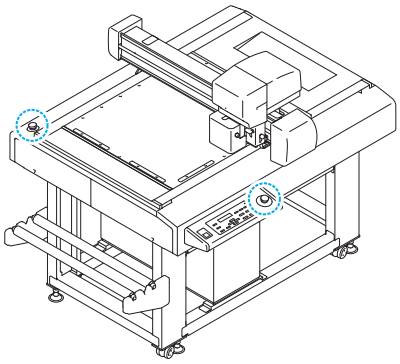

Applying an Emergency Stop

1 **Press the EMERGENCY switch.**

- Operation stops and the unit turns off.

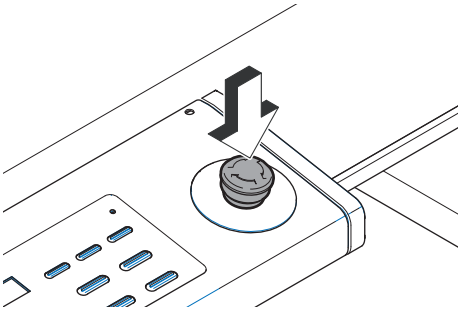

Resetting an Emergency Stop

1 **Turn the EMERGENCY switch clockwise to unlock it.**

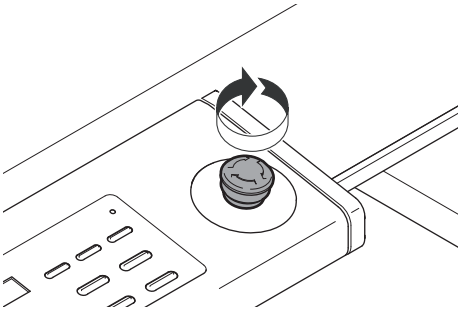

2 **Press the POWER switch.**

- Unit operation starts.

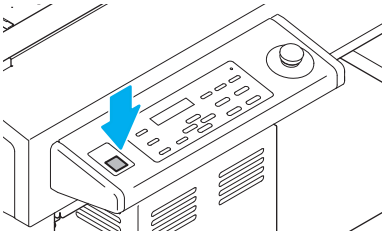

Important!

- Wait at least 30 seconds after turning OFF the power before resetting an emergency stop. Failure to do so may result in unit malfunctions.

Attach the felt mat

If using reciprocating, attach a felt mat or hard mat to match the work to be cut.(☞ P.1-10)

- When using the tangential cutter, please use the cutting mat with holes.
- When using a reciprocating cutter, please use by placing a felt mat or hard mat on top of the cutting mat.
  Please use properly felt mat / hard mat by the work. (☞ P.1-10)

(1) Put the mat on the cutting panel.

(2) Insert a set guide plate into the holes at each edge of the cutting panel.
- Insert the set guide plate along the edges of the mat.
- Set set guide plate on the positions circled in the right.

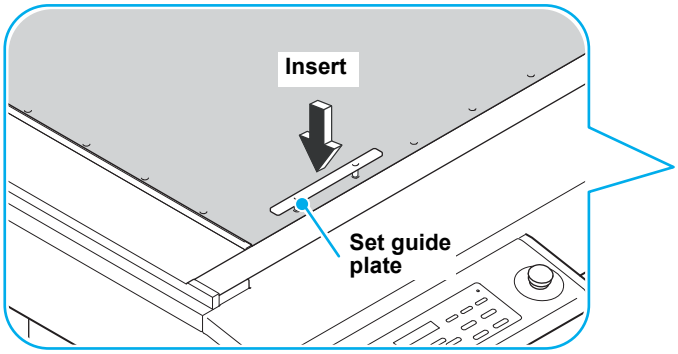

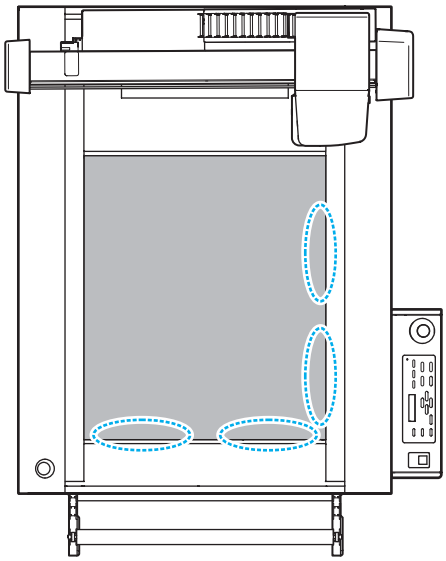

Inserting the Set Guide Plates

Insert the set guide plates as a guide to keep the workpiece straight.
Insert them into the appropriate positions for the size of the workpiece.

Important!
- Make sure to firmly insert the set guide plate into the hole of the cut panel surface. When the power is turned on while some area of the set guide plate floats, the set guide plate may be hit by the head and may cause the head damage.

- Insert a set guide plate into the holes at each edge of the cutting panel.

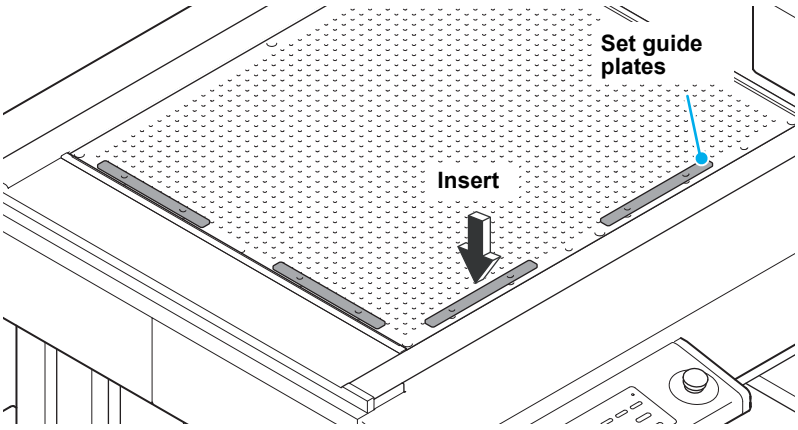

The types of workpiece that can be cut and the blade types that can be used differ according to the unit.

Workpiece Types that Can be Cut (Guide)

Work	Cutter Type	Tool Type	Unit		Felt Mat	Hard Mat	Cutting Mat
			A	B			
Coated board 200g/m^2~600g/m^2	———	Cutter holder C with edge (SPA-0267)	○		○		
	High-speed steel blade 30°(SPB-0043)	Tangential cutter holder 2Nα (SPA-0261)		○			○
	Carbide blade 30° (SPB-0045)						
Woodlac panel	Carbide blade 7x15 (SPB-0075) (Reciprocating cutter) 	Reciprocating cutter holder 07L (SPA-0260)		○		○	
Styrene board							
Corrugated cardboard F, G	High-speed steel blade 30°(SPB-0043) Carbide blade 30° (SPB-0045)	Tangential cutter holder 2Nα (SPA-0261)		○			○
PET pouch							
Sandblasted rubber							
Label paper/ Film	High-speed steel blade 30°(SPB-0043) Carbide blade 30 °(SPB-0045)	Tangential cutter holder 2Nα (SPA-0261)		○			○
	Swivel Blade(SPB-0030)	Cutter holder(SPA-0090)	○				○
PVC film	Swivel Blade(SPB-0030)	Cutter holder(SPA-0090)	○				○
Artificial leather	High-speed steel blade 30°(SPB-0043) Carbide blade 30° (SPB-0045)	Tangential cutter holder 2Nα (SPA-0261)		○			○
Urethane form (Sponge)10mm	Reciprocating cutter 2° x10 (SPB-0086) Or Carbide blade 7x15(SPB-0075) 	Reciprocating cutter holder 07L (SPA-0260)		○	○	○	

Important!

- Various types of workpiece may exist with the same name. Use the workpiece types in the table above as a guideline only.
  Always make a test cut before cutting actual workpieces. (P.2-17)

Blade Types that Can Be Used

Tool (Cutter) Type		Product number	A unit	B unit	Felt Mat	Hard Mat	Cutting Mat
Cutter	High-speed, 30°	SPB-0043		○			○
	Carbide, 30°	SPB-0045		○			○
	Reciprocating cutter 2° x10	SPB-0086		○	○	○	
	Carbide blade 7x15 (Reciprocating cutter)	SPB-0075		○	○	○	
	Swivel Blade	SPB-0030	○				○
	Cutter holder C with edge.	SPA-0267	○		○	○	
Pen			○		○	○	○
Grid roller				○	○		

Mounting Tools

The heads (A, B) that mount tools are shown below.

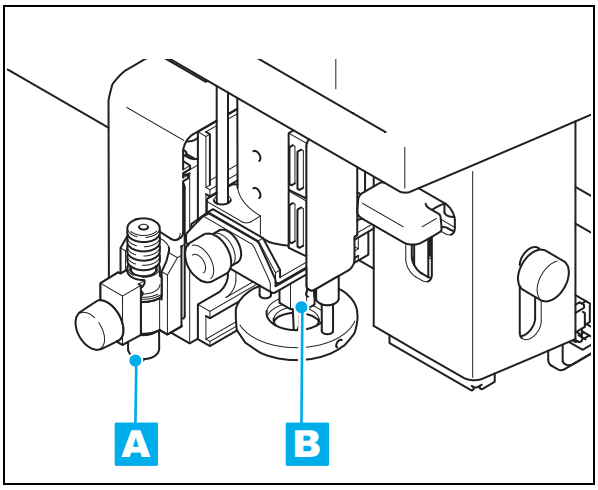

Unit	Applicable Tools	See page
A	Pen, swivel cutter holder, swivel cutter holder C	P.1-11
B	Grid roller	P.1-16
	Reciprocating cutter	P.1-17
	Tangential cutter	P.1-17

Mounting the Pen or Swivel Blade

Caution

- Don't touch the cutter blade with your fingers.
  ->Sharp cutter tip may injure you.
- After setting the cutter, do not shake the cutter holder.
  ->The tip of the cutter may pop out and may injure you.
- Keep the cutter out of reach of children. Dispose of the used cutter blade in compliance with the applicable regulations.

Important!

- The dedicated cutter blade is built in the cutter holder C with edge (white)(SPA-0267). It cannot be removed.

How to install a cutter (Blade replacement type)

1 **Remove the cap located at the edge by rotating it.**

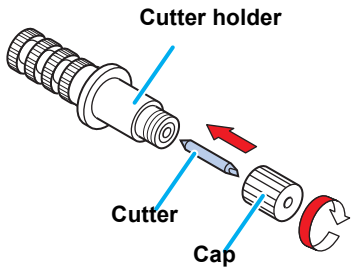

2 **Replace thecutter with a new one using tweezers or the like.**

3 **Turn the adjusting knob to adjust the protruding amount of the cutter.**

- arrow to protrude the cutter blade.
  (0.5 mm per revolution)

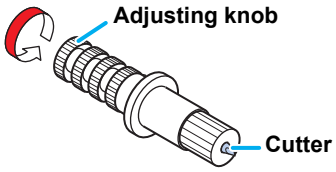

How to install the cutter holder

1 **Rotate the knob to loosen the holder presser.**

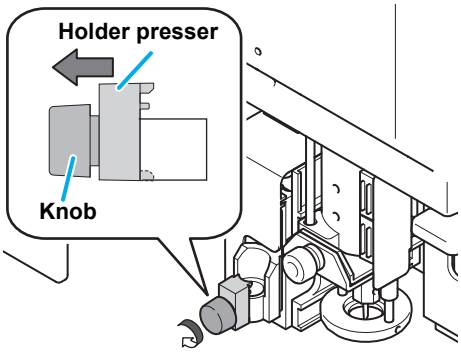

2 **Insert the cutter holder into the tool holder.**

- Push the brim of the cutter holder against the tool holder.
- Press the brim of the cutter holder with the I holder presser.

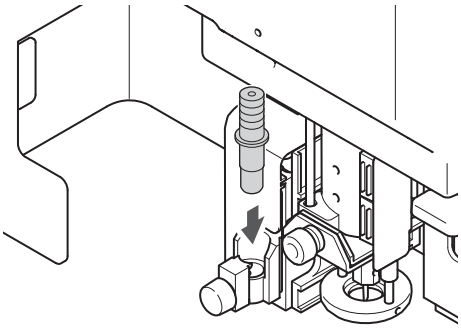

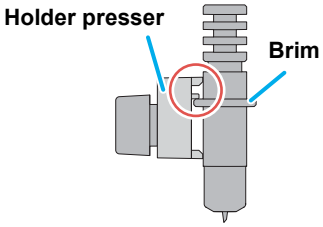

Attachment of Swivel Cutter for cutting board

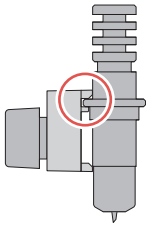

Attachment of Cutter holder C with edge (white) for Felt Mat

3 **Fix the cutter holder.**

- Turn the knob of the tool holder clockwise, and surely fix it.

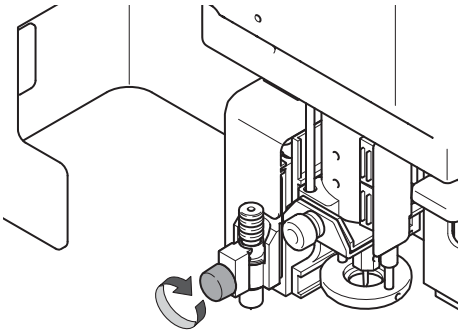

Important!

- Fix the cutter holder firmly. If not, accurate and high-quality cutting (plotting) will not be achieved.
- Install the cutter holder to the tool holder of the carriage.Be sure to insert the cutter holder all the way in the tool holder.

Replacing the Swivel Blade

1 **"Mounting the Pen or Swivel Blade"Follow steps 1 - 3 to replace the blade.**

2 **Adjust the amount that the blade protrudes.**

- For details about the adjustment, see P.2-14.

Important!

- The dedicated cutter blade is built in the eccentric cutter holder C (white). It cannot be removed.

How to Install a Ballpoint Pen

1 **Insert a spring into the pen tip.**



2 **While pressing the cap onto the spring, attach it on the pen adapter.**

- Rotate the cap to the direction indicated with an arrow and attach it on the pen adapter.

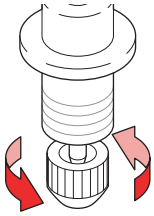

3 **Rotate the knob to loosen the holder presser.**

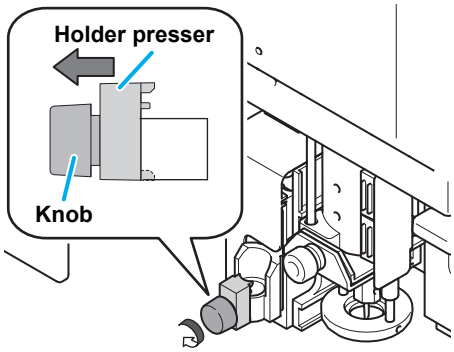

4 **Insert the pen adapter with the pen into the tool holder.**

- Make sure that the brim of the pen adapter is rested on the tool holder.
- Set the adapter in such a way that the fixing screw will not obstruct operation.
- Press the brim of the pen adapter with the holder presser.

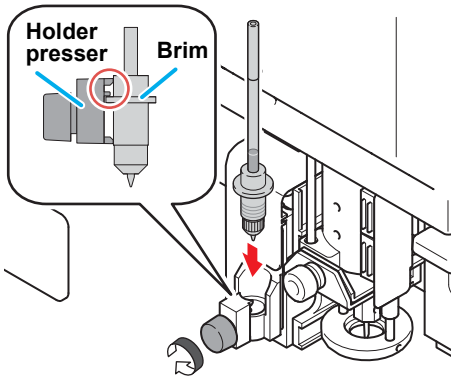

5 **Fix the tool.**

- Rotate the knob clockwise to fix firmly.

- When you replace the ballpoint pen (SPB-0726), contact a distributor in your district or our office to call for service

Mounting the Tangential Cutter

Mount the tangential cutter in Unit B.

Caution

- Do not touch the blade with bare hands. This may cause injury.

Mounting the Tangential Cutter Blade

Mount the tangential cutter blade in the cutter holder.

1 Use the 2.5 mm hexagonal wrench supplied to loosen the stopper screw.

- Loosen the stopper screw on the cutter holder.
- Turn the cutter stopper counterclockwise to loosen it.

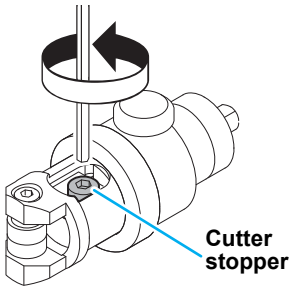

2 Insert the blade.

- Insert the blade using the tweezers supplied.
- Insert the blade into the holder, keeping it in the direction shown in the diagram.

- When mounting an NT high-speed blade, use the hand lapper supplied to round off the tip and grind down the ridge. Grinding off the ridge allows the blade to fit properly in the holder. Rounding off the tip improves the life of the cutter.

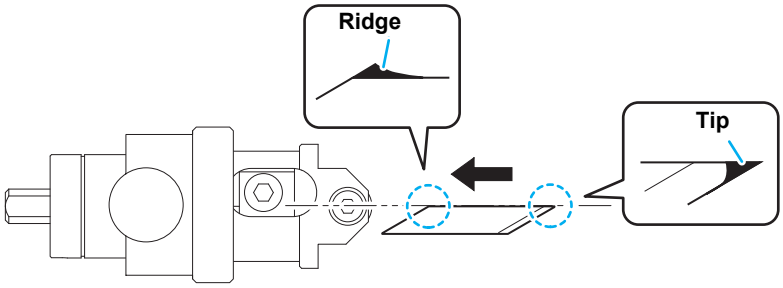

- Lap the tip gently 5 to 10 times while checking the amount ground away.

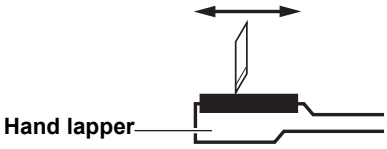

3 Tighten the cutter stopper.

- Turn the cutter stopper clockwise to tighten it.

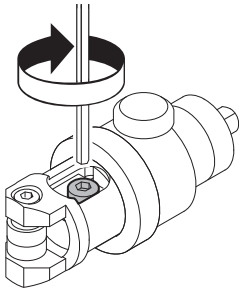

Replacing the Tangential Cutter

1 **"Mounting the Tangential Cutter Blade"Follow steps 1 - 3 to replace the blade.**

2 **Adjust the amount that the blade protrudes.**

- For details about the adjustment, see P.2-14.

Mounting the Cutter Holder

After mounting the cutter, mount the cutter holder into the unit.

1 **Loosen the stopper screw.**

- With the supplied hexagon wrench (2.0mm), fasten temporarily the supplied stopper screw in the holder.

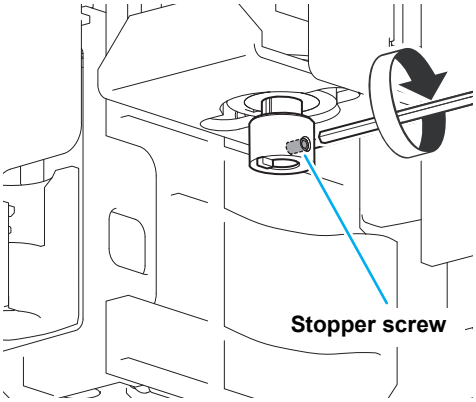

2 **Insert the Unit B pin into the groove in the cutter holder.**

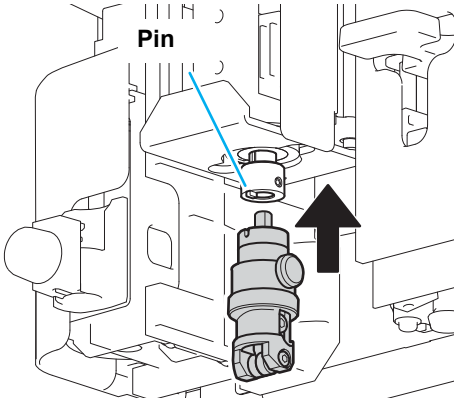

3 **Use the 2.0 mm hexagonal wrench supplied to tighten the stopper screw.**

- Firmly fasten the cutter holder.
- Correct quality may not be achieved if the stopper screw is not fully tightened.

- Make sure to tighten with reliably butting the edge face of the cutter holder.

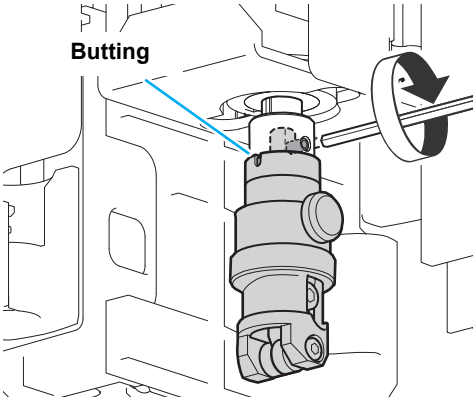

Mounting the Grid Roller

Mount the grid roller in Unit B.

1 Attach the grid tool to grid holder

(1) Remove the set screw of the grid holder
(2) Plug the grid roller to scribe holder
(3) Fixed with set screws

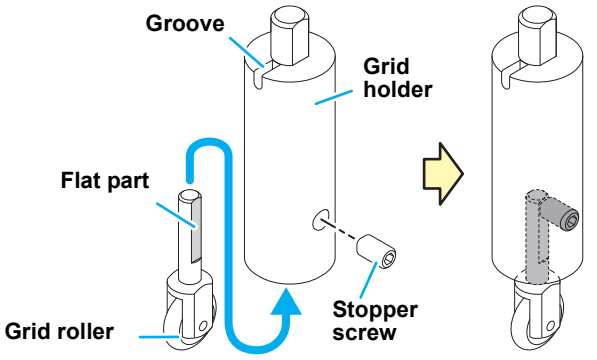

2 Insert the Unit B pin into the groove in the grid roller.

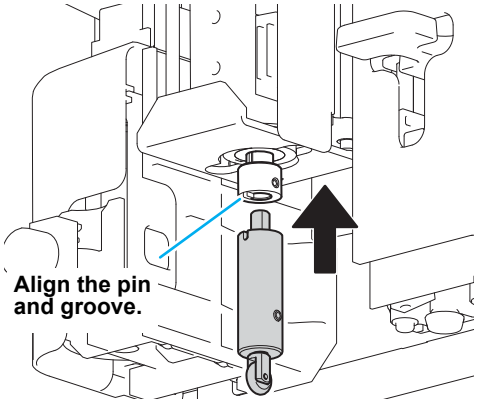

3 Use the 2.0 mm hexagonal wrench supplied to tighten the stopper screw.

- Firmly fasten the cutter holder.
- Correct quality may not be achieved if the stopper screw is not fully tightened.

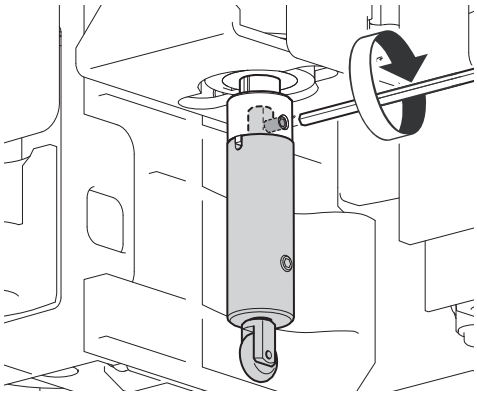

Mounting the Reciprocating Cutter

Attach a reciprocating cutter to B unit.

Caution

- Do not touch the blade with bare hands. This may cause injury.

Mounting the Reciprocating Cutter Blade

- A reciprocating cutter holder is required to mount the reciprocating cutter.

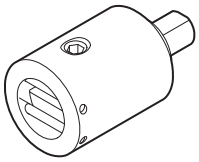

For Unit B, Model R1
Name: Reciprocating Cutter Holder 07L (SPA-0260)
Blade: Carbide 2°x10 (SPB-0086)
Carbide blade 7x15 (SPB-0075)

1 Use the 2.0 mm hexagonal wrench supplied to loosen the stopper screw.

- Loosen the stopper screw on the cutter holder.
- Turn the cutter stopper counterclockwise to loosen it.
- Do not loosen the screw back side of the setscrew.

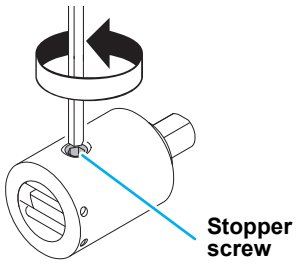

2 Firmly push the blade as far as possible into the cutter holder.

- For safety, handle the blade with the tweezers supplied.
- Attention to the flat part of the holder, setscrews and the direction of the blade and attach as shown in the figure.

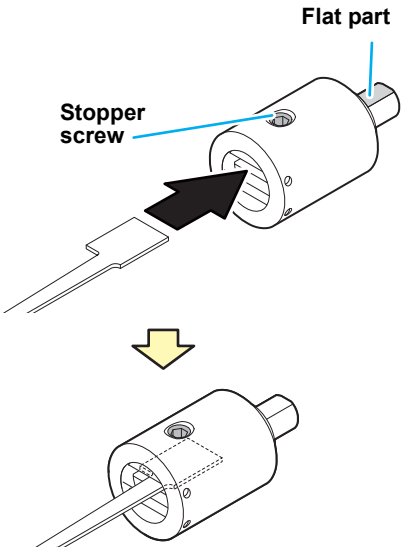

3 Tighten the stopper screw and clamp the blade.

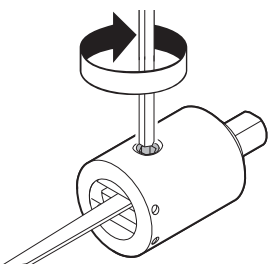

Replacing the Reciprocating Cutter

1 **Follow steps "Mounting the Reciprocating Cutter Blade" to replace the blade.**

Mounting the Reciprocating Cutter Holder

1 **Press the jog keys in local mode to move the head forward.**

2 **Turn off the unit power.**

3 **Loosen the Unit B fixing screw.**

- Turn the fixing screw counterclockwise to loosen it.
- The fixing screw is 4 mm long. It will fall out of Unit B if it is loosened too much.

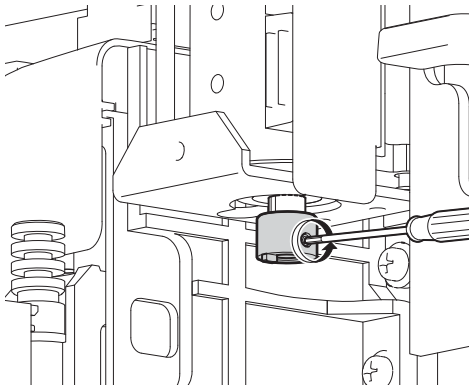

4 **Tighten the fixing screw.**

- Push the cutter holder firmly upwards to eliminate any clearance between the lug on Unit B and the groove in the reciprocating holder, and then tighten the fixing screw.
- Firmly fasten the cutter holder. If the holder is loose, the cutter may become unstable during cutting and reduce the cutting accuracy.

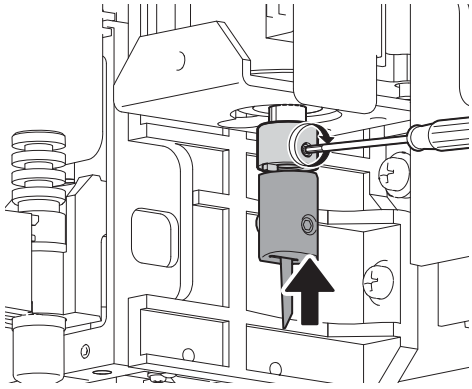

Attach the Work Holder

The work holder prevents the work from moving up after it is cut.

- The work holder can be used for works of up to 10 mm thick.The work holder does not support thickness greater than 10 mm.
- When using soft works (sponges, etc.), do not use the work holder. The work holder is designed to hold works such as corrugated fiberboard.
- When using a work holder, be sure that overall bottom surface is flat against the work.
  If bottom surface run off the work edge, in a case cutting edge of a work, cutter does not down and may not cut correctly.

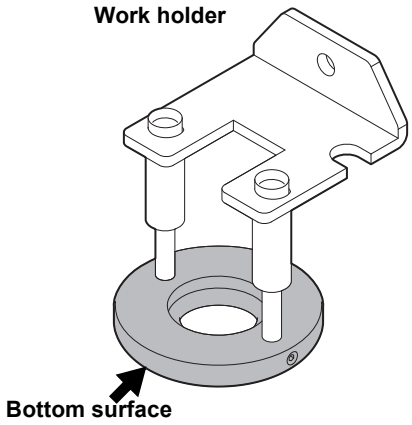

1 Remove the fixing screw of unit B.

- To loosen the screw, turn it counter clockwise.

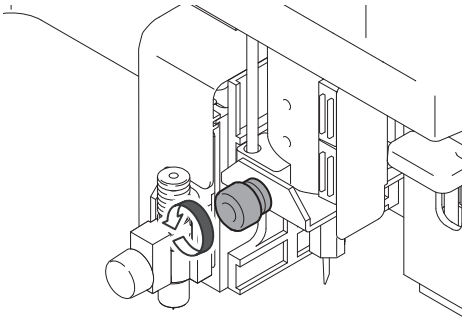

2 Set the work holder to unit B andtighten the screw.

Important!

- When installing the work holder, press against the mounting surface of the work holder to supporter base, and attach as work holder is not inclined.

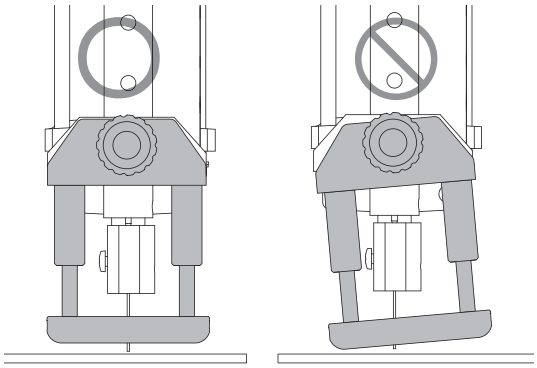

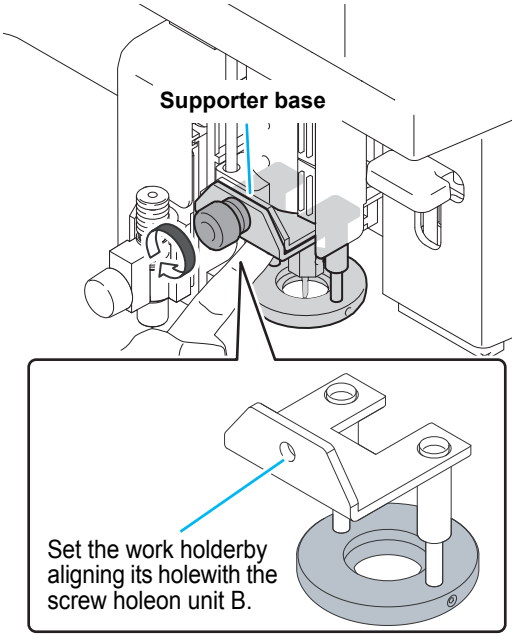

Press REMOTE on the operation panel to toggle between the local and remote status.

Local Status and Displays

The local status permits movement of the heads, setup of the unit functions, and receiving data from the PC.
All keys on the operation panel are enabled in local status.

Remote Status and Displays

The remote status permits cutting or drawing of the received data.
The display shows the cutting (drawing) conditions and the received data volume. The number of displayed data decreases as cutting (drawing) proceeds.
POWER ON, POWER OFF, VACUUM, and REMOTE are enabled on the operation screen panel.
The following three screens appear in the remote status.

Recipro Cutter, Grid Roller Selected

This remote screen appears when Unit:B, TOOL: Rec.Cutter 1and 2 / θCutter / Roller1 to 3 is selected for TOOL SELECT in the local menu. S (start offset) and E (end offset) do not appear when the grid roller is selected.

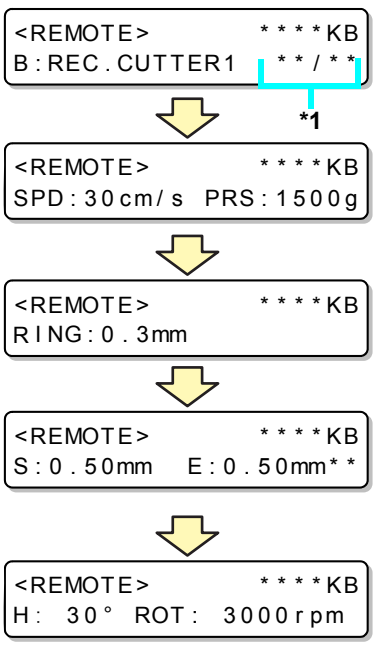

PRS : Cutting pressure
SPD : Cutting speed
RING : Rounding radius
S : Start offset
E : End offset
H: Up angle
ROT : Rotation *2

*1) Display the current number / total number during running the number of cutting.
*2) When select Tangential cutter, roller, “ROT (Rotation)” is not displayed.

Pen Selected

This remote screen appears when HEAD:A, TOOL: Pen is selected for TOOL SELECT in the local menu.

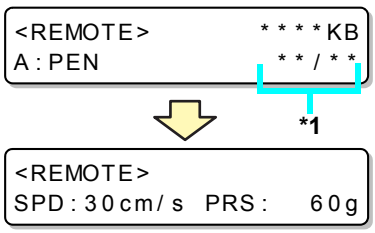

PRS : Cutting pressure
SPD : Cutting speed

Swivel Blade Selected

This remote screen appears when HEAD:A or TOOL:SWIVEL is selected for TOOL SELECT in the local menu.

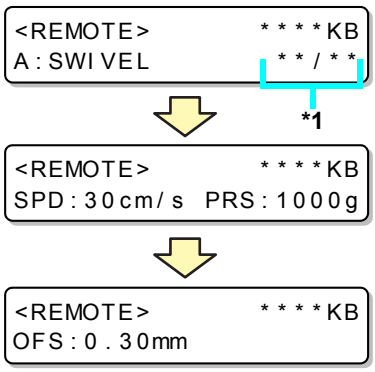

PRS : Cutting pressure
SPD : Cutting speed
OFS: Offset value

*1) Display the current number / total number during running the number of cutting.

Setting the Command Origin

This setting aligns the unit command origin position with the command origin position in the CAD system used. For more information on the command origin position handled by the CAD system, see the CAD Instruction Manual.

Item	Set value
LOW-LEFT	Lower-left of the maximum effective cutting area.
CENTER	Center of the maximum effective cutting area.

1 **Select [PLOT SETTING] of the set up menu.**

(1) Press the FUNCTION key in LOCAL.
(2) Press ▲ ▼ to select [SET UP] and press the ENTER key.
(3) Press ▲ ▼ to select [PLOT SETTING].
(4) Press the ENTER key.

2 **Press the jog key ▲ or ▼ to select [ORIGIN], and ress the ENTER key.**

```
<PLOT SETTING>
ORIGIN    :LOE-LEFT
```

3 **Press the jog key ▲ or ▼ to select Setting.**

• Set values: LOW-LEFT , CENTER

```
<PLOT SETTING>
ROTATION  :CENTER
```

4 **Press the ENTER key.**

• Press END if you do not want to save the setting.

5 **Press the END key twice for terminating this function.**

This unit uses the command MGL-IIC3.
Set the CAD command to connect to the unit to MGL-IIC3.

Important!

- Only the MGL-IIC3 commands are available in MODE SET. This command cannot be changed at the plotter.

Setting Automatic Head Retraction

Sets the time before the head begins to retract to the retraction position when cutting (drawing) of data from the PC is complete.

Item	Set value
OFF	No automatic retraction
(1) LOW-LEFT	Save to the lower left
(2) LOW-RIGHT	Save to the lower right.
(3) UP-LEFT	Save to the upper left.
(4) UP-RIGHT	Save to the upper right.

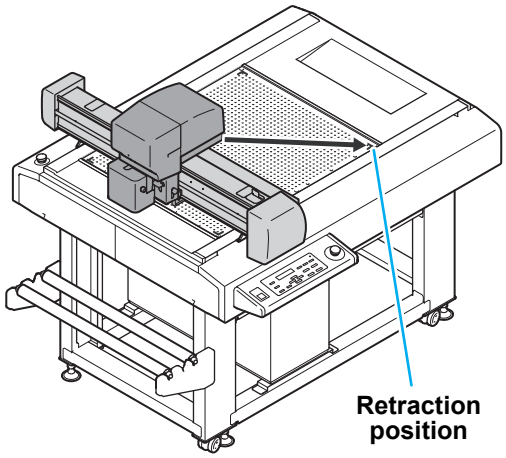

1 **Select [PLOT SETTING] of the set up menu.**

(1) Press the FUNCTION key in LOCAL.
(2) Press ▲ ▼ to select [SET UP] and press the ENTER key.
(3) Press ▲ ▼ to select [PLOT SETTING].
(4) Press the ENTER key.

2 **Press the jog key ▲ or ▼ to select [AFTER PLOT], and ress the ENTER key.**

<AFTER PLOT>
AUTO VIEW:OFF

3 **Press the jog key ▲ or ▼ to select [AUTO VIEW], and ress the ENTER key.**

<AFTER PLOT>
AUTO VIEW:OFF

4 **Press the jog key ▲ or ▼ to select retraction position.**

<AFTER PLOT>
AUTO VIEW:UP-LEFT

• Set values: OFF , LOW-LEFT, LOW-RIGHT, UP-LEFT, UP-RIGHT

5 **Press the ENTER key.**

• Press END if you do not want to save the setting.

6 **Press the END key twice for terminating this function.**

Setting the Vacuum

Sets the vacuum operation when the vacuum is used.

Item	Set value
AUTO OFF *1	If automatic head retraction is set to available, the vacuum turns off automatically after head retraction.
N/C	Vacuum remains on after head retraction.

*1. The vacuum cannot turn off automatically if automatic head retraction is OFF.

- If replace the sheet during continuous cut of register mark, it automatically turns off the vacuum regardless the setting of the head automatic retraction.

Enabling / Disabling the Vacuum Automatic OFF Function

1 **Select [PLOT SETTING] of the set up menu.**

(1) Press the FUNCTION key in LOCAL.
(2) Press ▲ ▼ to select [SET UP] and press the ENTER key.
(3) Press ▲ ▼ to select [PLOT SETTING].
(4) Press the ENTER key.

2 **Press the jog key ▲ or ▼ to select [AFTER PLOT], and ress the ENTER key.**

<AFTER PLOT>
AUTO VIEW:OFF

3 **Press the jog key ▲ or ▼ to select [VACUUM], and ress the ENTER key.**

<AFTER PLOT>
VACUUM :N/C

4 **Press the jog key ▲ or ▼ to select setting.**

- Set values: N/C , AUTO OFF

<AFTER PLOT>
VACUUM :AUTO OFF

5 **Press the ENTER key.**

- Press END if you do not want to save the setting.

6 **Press the END key twice for terminating this function.**

Chpater 2
Basic Operations



This Section....

... describes the basic operations, such as mounting tools and workpieces.

Basic Operation Workflow 2-2
Turning the Power ON..... 2-3
Moving the Head 2-4
Moving the Head Using the Head Retraction [VIEW] Function 2-4
Moving the Head Using the Jog Keys 2-5
Fixing the Workpiece..... 2-6
Fixing the Workpiece with Adhesive Tape 2-6
Fixing the Workpiece by Vacuum Adhesion 2-7
Method of fixing the sponge 2-9
Selecting Tools..... 2-10
Select the tool condition 2-10
Set Items 2-11
Adjusting the Blade to Match the Workpiece..... 2-14
Adjusting the tial Cutter 2-14
Adjusting the Swivel Blade 2-16
Making a Test Cut 2-17
Checking the Tool Status 2-18
Checking the Status Between Tools 2-20
Setting the Drawing Origin..... 2-23
Cutting (Drawing)..... 2-24
Effective Cutting Area 2-24
Cutting (Drawing) 2-24
Interrupting Processing 2-25
Restarting Processing 2-25
Interrupting Processing (Data Clear) 2-26
Turning the Power OFF 2-27

Basic Operation Workflow

This section describes the basic operation workflow.
For details, see the reference page shown.

1	Turning the power on	See “Turning the power on” (P.2-8)
2	Moving the Head	See "Moving the Head"(☞ P.2-4).
3	Fixing the Workpiece	See "Fixing the Workpiece"(☞ P.2-6).
4	Setting the tool conditions	See “Selecting Tools”(☞ P.2-10).
5	Select the tool condition	See Select the tool condition(☞ P.2-10).
6	Making a Test Cut	See "Making a Test Cut"(☞ P.2-17).
7	Setting the Drawing Origin	See "Setting the Drawing Origin"(☞ P.2-23).
8	Cutting (Drawing)	See "Cutting (Drawing)"(☞ P.2-24).
9	Turning the power off	See “Turning the power on” (P.2-8)

Turning the Power ON

This machine is provided with the following two power switches:

Main power switch:
Two switches are located on the right side of this machine.Keep this switch ON all the time.

Power switch : Normally, use this switch to turn the power ON/OFF.

Caution

- While the power is ON, do not place objects other than the workpiece on the cutting panel. When the power is turned ON, the head moves to the low-right retraction point. The head may be damaged if it hits an object.
- Please lift up the mark sensor before turn on the power. When the power is turned on by setting the felt mat while lowering the mark sensor, the set guide plate may be hit by the head and may cause the head damage.
- Make sure that the set guide plate is firmly inserted into the hole of the cut panel surface. When the power is turned on while some area of the set guide plate floats, the set guide plate may be hit by the head and may cause the head damage.
- Wait at least 30 seconds after turning OFF the power before turning the power ON again. Failure to do so may result in unit malfunctions.

1 Check for objects on the cutting panel.

- Remove any objects before turning ON the power.

2 Turn the main power switch ON.

- Set the main power switches located on the right side of this machine to the “I” side.

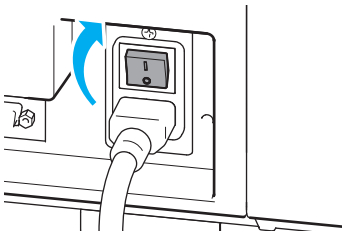

3 Turn the power switch ON.

- Push the power switch located on the operation panel.
- The green POWER lamp lights.

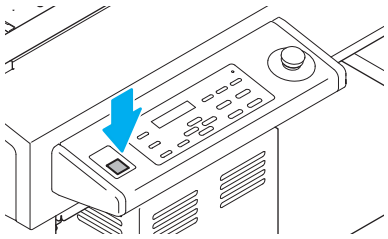

4 Turn ON the power of the connected PC.

5 When the display shows the screen in the right, lift up the mark sensor and then press the ENTER key.



- Origin detection starts.
- The head moves to the retraction point at the low-right of the cutting panel.
- The local menu appears.

- If the "START MODE" is set to REMOTE, the "REMOTE" will be displayed after the origin detection. (☞ P.2-24)
- If the "MARK DETECT" is enabled (other than off), it will be "Mark detection mode". (☞ P.4-10)

Caution

Important!

- After cutting the data with the register mark, lift up the mark sensor. When set a felt mat while lowering the mark sensor, the set guide plate may be hit by the head and may cause the head damage.

Moving the Head

The head can be moved to a convenient position to mount the workpiece, make a test cut, or mount a tool. Two methods are available to move the head.

- Using the head retraction (View) function
- Using the jog keys

Moving the Head Using the Head Retraction [VIEW] Function

The head can be moved at once to the table each corner, or the drawing origin.

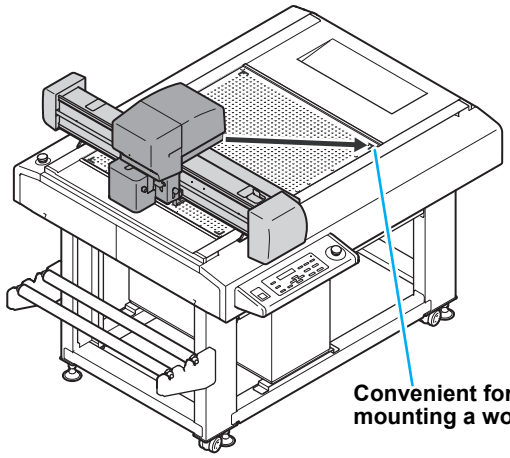

- If Automatic Head Retraction ☞ P.1-24 is set, the head automatically returns to the retraction position after cutting (drawing) is complete, so that the View function is not required.

1 **Press the VIEW key in LOCAL**

```
<VIEW>
VIEW POS  :ORIGIN
```

2 **Press ▲ ▼ and select the retracted position.**

- Set value: LOW-LEFT, LOW-RIGHT, ORIGIN, UP-LEFT, UP-RIGHT

```
<VIEW>
VIEW POS  :LOW-LEFT
```

3 **Press ENTER.**

- The head retracts to the designated position.

Moving the Head Using the Jog Keys

Use this method for mounting tools or making a test cut or sample cut.
The following function allows the head to be accurately positioned using the jog keys.

The coordinates are displayed with respect to the command origin position.



1 **Select the local menu.**

- If the unit is in remote status, press REMOTE to set local status.



2 **Press a jog key ▲ ▼ ◀ ▶ once.**



3 **Press a jog key ▲ ▼ ◀ ▶ to move the head.**

- The destination coordinates are displayed.



4 **Press ENTER or END.**

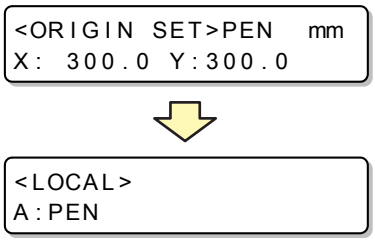

Two methods are available to fix a workpiece.

- Fixing the Workpiece by Vacuum Adhesion
- Fixing the Workpiece with Adhesive Tape

Caution

- The following table shows the acceptable workpiece thicknesses (Maximum value).

Workpiece thickness	10 mm

- Four area stickers are stuck on the table. They indicate the maximum effective cutting area. Mount the workpiece inside this area. The plotter is unable to cut outside the area indicated by the area stickers.

Fixing the Workpiece with Adhesive Tape

During swivel cutter / tial cutter used, and set the work(thin packing, industrial rubber, etc) that can not be properly adsorbed in vacuum , use adhesive tape, and fix the workpiece.

Important!

- Use an adhesive tape that does not leave a residue of glue or tape on the cutting panel.

Fix the four edges of the workpiece with the adhesive tape.

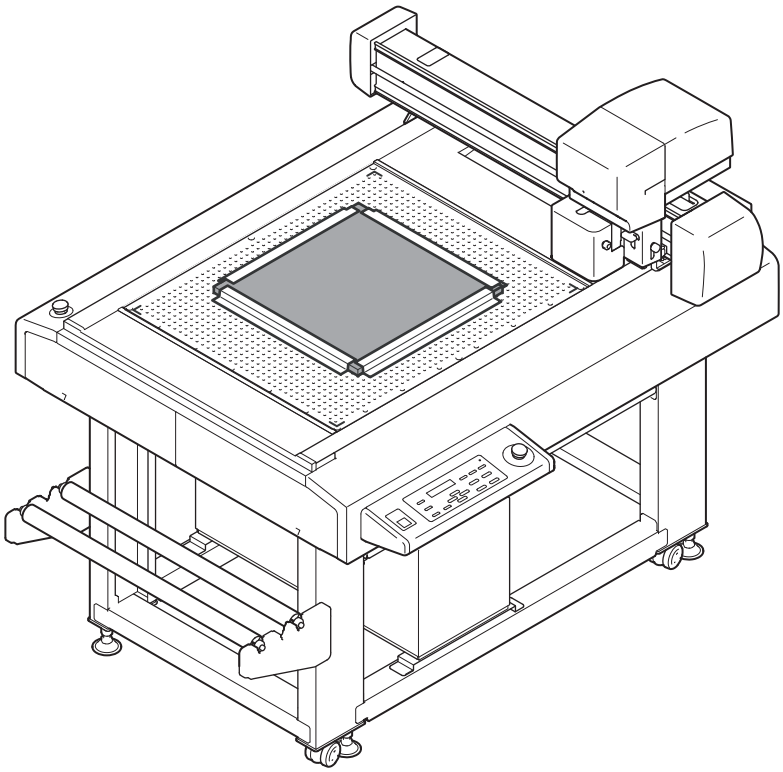

Fixing the Workpiece by Vacuum Adhesion

Relatively thin workpieces, such as thin coated board, corrugated cardboard and sponge, can be fixed by vacuum adhesion.

Important!

- If all the suction holes are not covered such as the following cases, use some sort of film to cover all the remaining holes. If some of the air holes are not covered, the adhesion force may be too low to fully fasten the workpiece.

Small workpiece and cannot cover all the suction holes on cut panel

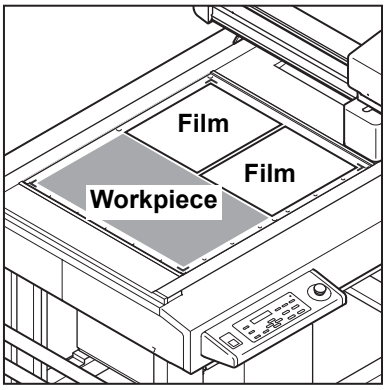

Smaller workpieces are set side by side and the gap cannot be filled

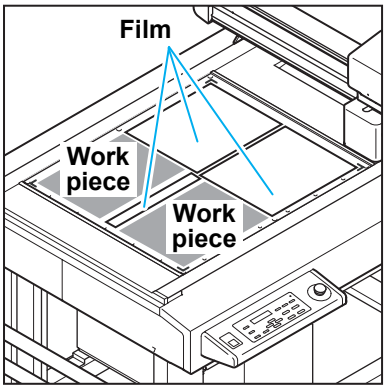

Workpiece is positioned away from the set guide plate

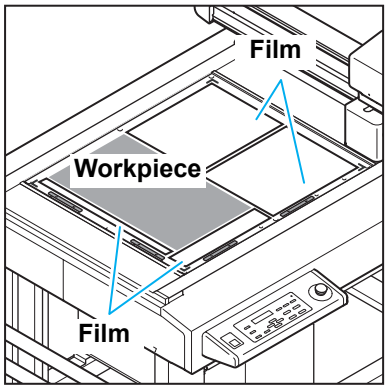

- When cut multiple small data, please block frequently the part that was cut earlier in the following procedure.
  If continue to cut (draw) as it is, air comes in from the cut portion, and the workpiece will not be fixed. In addition, the adsorption sheet of the cut portion is peeled off from the workpiece surface and it may cause inferior in drawing.
  (1) Press the REMOTE key, to suspend cut (draw) temporarily
  (2) Press the jog key ▲ ▼ ◀ ▶ to retract the head
  (3) Cover the adsorption sheet cut in small pieces to the portion cut earlier.
  (4) Press the END key to return to the local mode
  (5) Press the REMOTE key, and then restart the cut (draw)

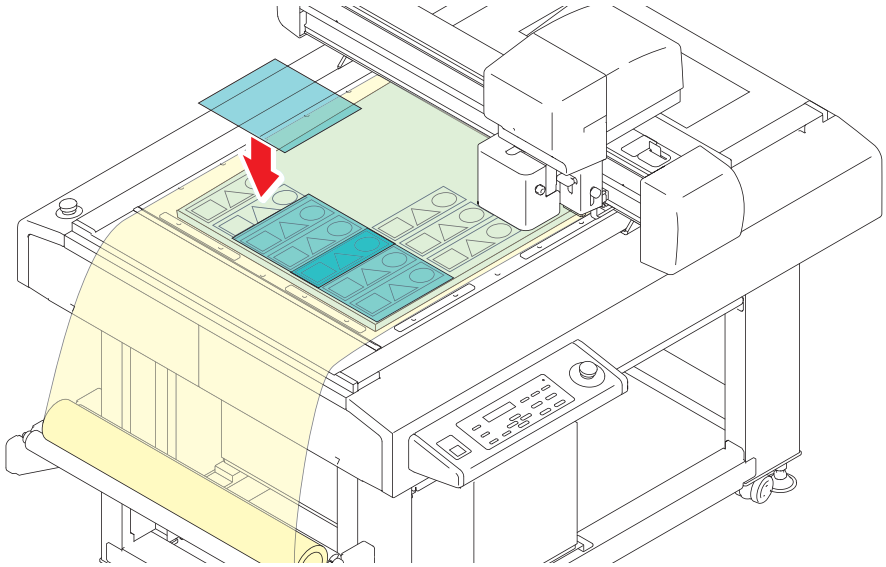

- It is also possible to block the cut area other than workpiece with the supplies, adsorption sheet(SPC-0787).
  In that case, cut out the sheet on the workpiece with a cutter.

1 **Put the workpiece on the cutting panel.**

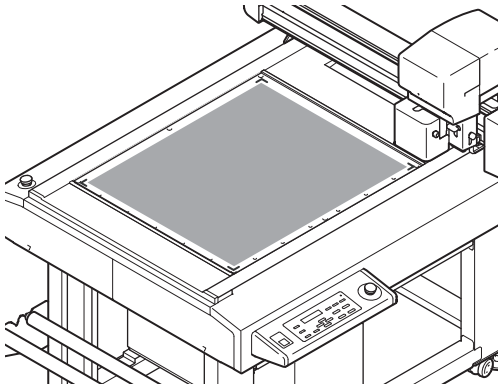

2 **Press** VACUUM **.**

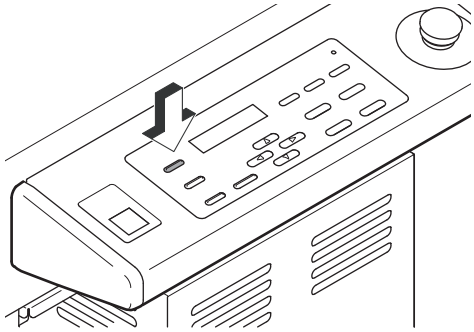

Method of fixing the sponge

When cut the soft material such as a sponge that can not be adsorbed and fixed, use a adsorption sheet to fix the work in the following ways.

1 **Put the workpiece on the cutting panel.**

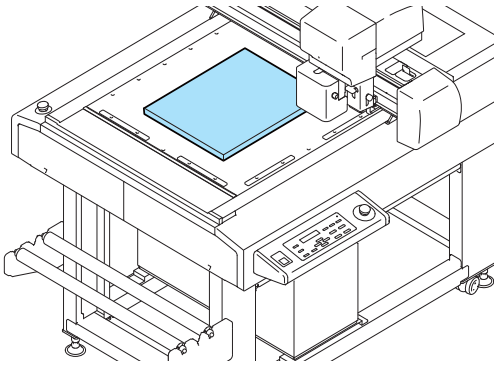

2 **Set a roll of adsorption sheet to roll holder**

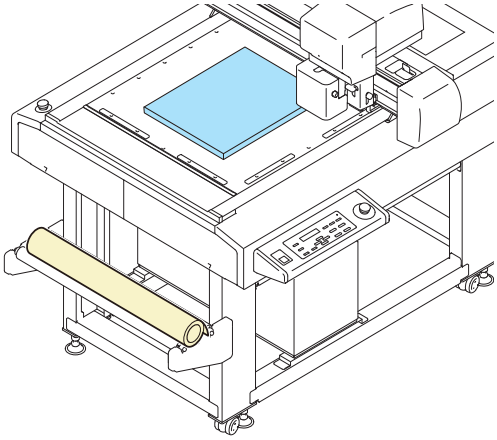

3 **Pull out the adsorption sheet and cover the entire work surface**

Important!

- In the case of nonporous work, please cut the adsorption sheet on the work.
  If you do not cut, adsorption sheet float and jam occurs.

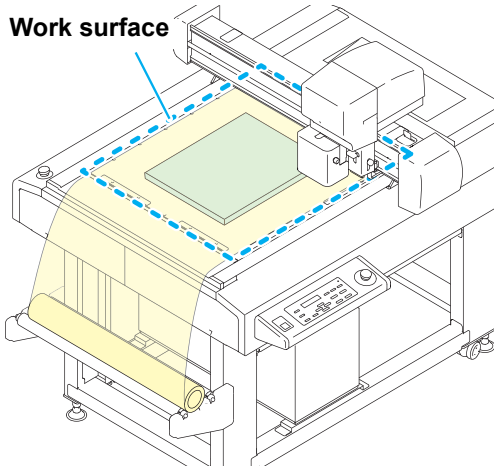

4 **Press VACUUM .**

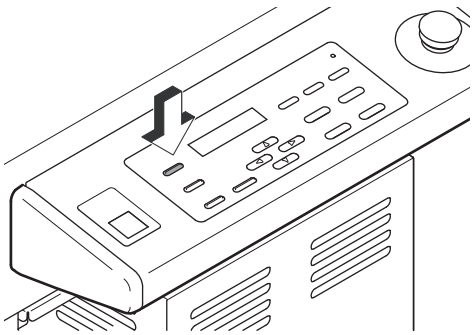

Select the tool condition

Before cutting (plotting), select the tool condition depending on the sheet and the tool type to be used.

1 **Press the TOOL key in LOCAL mode.**

<TOOL SELECT>
A : PEN

2 **Press ▲▼ key and select Unit.**

- Set values: A, B

<TOOL SELECT>
B : REC. CUTTER1

3 **Press ENTER key.**

4 **Press ▲▼ key and select TOOL.**

- The selectable tools differ according to the type of unit.

<TOOL SELECT>
B : REC. CUTTER1

	Unit	
Tool	**A**	**B**
Pen	Applicable	N/A
Swivel blade	Applicable	N/A
Rec. Cutter 1 to 3	N/A	Applicable
θ Cutter	N/A	Applicable
Roller 1 to 3	N/A	Applicable

5 **Press ENTER key.**

- The setting is saved.
- Press END if you do not want to save the setting.

6 **Press ▲▼ key to display the cut conition to set, and press the ENTER key.**

- The displayed items differ according to the tool. (☞ Set Items)

7 **Press ▲▼ key to set the setting value, and press the ENTER key.**

- The setting is saved.
- Press END if you do not want to save the setting.

8 **To select and set another item, repeat Steps 7 and 8.**

- For details about the settings, see “Set Items”.

9 **When all settings are complete, press END key.**

Set Items

The cutting condition set items differ according to the tool.

Set Item	Tool Type					Set value	Set value
	A		B				
	Swivel cutter	Pen	Reciprocating cutter	Crease roller	θ Cutter		
CUT SPEED	○	○	○	○	○	0.2~30 (cm/s)	Speed of tool movement in the X or Y direction. Changes according to the type of tool and workpiece and the data size.
PRESSURE		○				30 ~ 150 (100 or less: per 5g, 100 ~ 150: per 10g)	Pressure when cutting the workpiece with a press tool.
	○					30 ~ 1000 (100 or less: per 5g, 100 ~ 400: per 10g, 400 ~: per 50g)	
			○ *	○	○	500 ~ 1500 (500 ~: per 100g) * Fixed 1500g in setting VIBRATION	
OFFSET	○					0.0 0~ 2.50 (step 0.05mm)	This is the offset value for the tip of the swivel blade cutter. Change the setting according to the workpiece thickness and wear of the cutter blade.
ACCELERATION	○	○	○	○		0.1 ~ 0.7 (step 0.1G)	Maximum tool acceleration. Changes according to the type of tool and workpiece and the data size.
VIBRATION			○			OFF, 1000 ~ 3000	Vibration speed (rpm) of the reciprocating tool. Set OFF when using cutter holder 2Nα.
RING DIST.			○	○	○	0.0 0~ 2.50 (step 0.05mm)	Sets the rounding radius (R) and adds a line segment between segments for a consecutive series of line segments. This reduces the degree of damage to the workpiece by the tool.
START CORR.			○		○	0.0 0~ 2.50 (step 0.05mm)	Offset for cutting start position when the tool descends. When cutting a thick workpiece, setting this offset to a large value cuts from the front of the workpiece to simplify separation.Adjust this setting while checking the finish.
END CORR.			○		○	0.0 0~ 2.50 (step 0.05mm)	Offset for cutting end position when the tool ascends. When cutting a thick workpiece, setting this offset to a large value makes an extra cut from the end position that simplifies.Adjust this setting while checking the finish.
UP ANGLE			○	○	○	0 ~ 180 (step 1 °)	Sets the minimum angle to raise the cutter and change the direction, when changing the cutting (crease) direction. This reduces the degree of damage to the workpiece by the tool.
PRESS CORR.			○	○	○	0 ~ 500 (step 100g)	Corrects the tool downwards pressure when cutting (crease cutting) a thick workpiece. Applying the PRESS COR value to the previously set press value ensures
Y PRESS				○		-1500 ~ +1500 (step 100g)	Corrects the press value in the Y-axis direction to allow crease cutting with a different pressure to the X-axis direction. When crease cutting corrugated cardboard, position the corrugated cardboard with the flutes in the Y direction to cut with a lighter pressure than in the X direction.

Set Item	Tool Type					Set value	Set value
	A		B				
	Swivel cutter	Pen	Reciprocating cutter	Crease roller	θ Cutter		
W ROLLER				○		OFF, 0.1 ~ 1.0mm	Centering the original data, drawing two ruled lines offsetting the setting value.
R5 SPEED		○				OFF, 1~2 (cm/s)	Speed for cutting an arc with a radius less than 5 mm. If OFF, the previously set speed is used for cutting.
			○		○	OFF, 0.5 (㎜ /s) ~ 2.0 (cm/s)	
R10 SPEED		○				OFF, 1~5 (cm/s)	Speed for cutting an arc of the radius between 5mm but less than 10mm. If OFF, the previously set speed is used for cutting.
			○		○	OFF, 0.5 (㎜ /s) ~ 2.0 (cm/s)	
R15 SPEED		○				OFF, 1~10 (cm/s)	Speed for cutting an arc of the radius between 10mm but less than 15mm. If OFF, the previously set speed is used for cutting.
			○		○	OFF, 0.5 (㎜ /s) ~ 2.0 (cm/s)	
R20 SPEED		○				OFF, 1~15 (cm/s)	Speed for drawing an arc with a radius at least 15 mm but less than 20 mm. If OFF, the previously set speed is used for drawing.
R30 SPEED		○				OFF, 1~20 (cm/s)	Speed for drawing an arc with a radius at least 20 mm but less than 30 mm. If OFF, the previously set speed is used for drawing.
R40 SPEED		○				OFF, 1~25 (cm/s)	Speed for drawing an arc with a radius at least 30 mm but less than 40 mm. If OFF, the previously set speed is used for drawing.
R50 SPEED		○				OFF, 1~30 (cm/s)	Speed for drawing an arc with a radius at least 40 mm but less than 50 mm. If OFF, the previously set speed is used for drawing.
R100 SPEED		○				OFF, 1~30 (cm/s)	Speed for drawing an arc with a radius at least 50 mm but less than 100 mm. If OFF, the previously set speed is used for drawing.

The Setting of The W Roller

Center the normal ruled line and draw 2 ruled lines to the offset position.

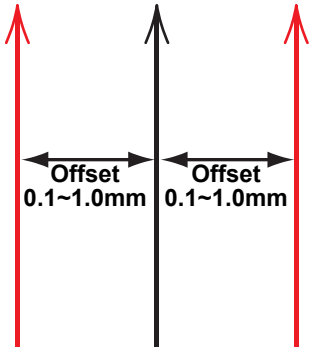

: Normal ruled

: Draw 2 ruled lines when W roller is "ON"

Important!

- Does not draw the normal ruled line.

1 **Press the TOOL key in LOCAL mode.**

```
<TOOL SELECT>
A:PEN
```

2 **Press ▲▼ key and select B Unit.**

```
<TOOL SELECT>
B:REC.CUTTER1
```

3 **Press ENTER key.**

4 **Press ▲▼ key and select Roller 1 to 3.**

```
<TOOL SELECT>
B:ROLLER1
```

5 **Press ENTER key.**

6 **Press ▲▼ key to display the [W ROLLER], and press the ENTER key.**

```
<CUT CONDITION>
 W-ROLLER :OFF
```

7 **Press ▲▼ key to set the setting value, and press the ENTER key.**

```
<CUT CONDITION>
 W-ROLLER :0.5mm
```

- If select "OFF" to the set value, it does not use the W roller function.
- Set values: OFF, 0.1 ~ 1.0mm

- If the W roller is set other than off, (w) will be displayed after the tool name.

```
<LOCAL>
A:ROLLOR1(W)
```

8 **Press END key several times and finish the setting**

This section describes how to adjust a tial cutter blade or swivel blade.

Important!

- It is not possible to adjust a reciprocating cutter blade.

Caution

- Handle the blade carefully to avoid injury. For safety, handle the blade with the tweezers supplied.

Adjusting the tial Cutter

A cutter holder is required to mount the tial cutter.

Head Type	Cutter Holder	Cutter	Applicable Workpiece
Unit B	Cutter holder 2 Nα	For high-speed, 30° For carbide, 30°	Workpiece thickness 2 mm max.

1 Loosen the dial stopper.

- Turn the dial stopper counterclockwise to loosen it.

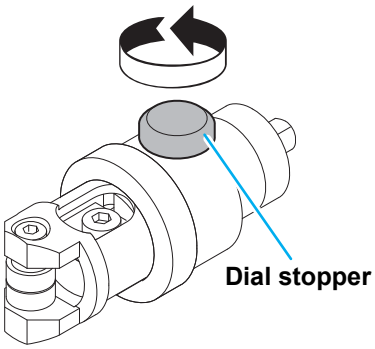

2 Turn the dial.

- Turn in the direction of the arrow.
  Turning it one revolution extends the blade 1 mm.
- As a rule of thumb, the blade tip should protrude by **(workpiece thickness + 0.2 mm)**.

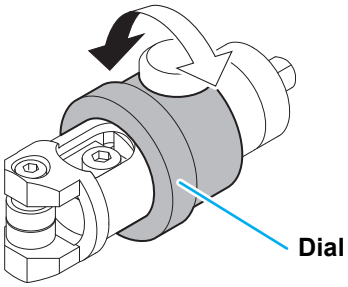

3 Tighten the dial stopper while pushing the dial in the direction of the arrow.

- The dial has some play. To eliminate discrepancies in the amount that the blade protrudes, push the dial in the direction of the arrow while tightening the dial stopper.

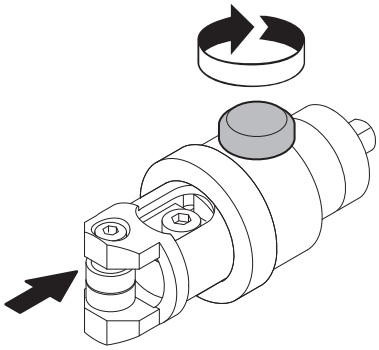

Important!

- When mounting a trial cutter in Unit B, select the "θ Cutter" in the Tool Select. (☞ P.2-11)
  If use with the setting other than "θ Cutter", it will damage the cutter holder and this equipment.

Adjusting the Swivel Blade

After adjusting the blade edge, set the cut condition and perform test cut to check whether cutting is performed well.

1 **Turn the adjusting knob to adjust the protruding amount of the cutter.**

- The blade protrudes when turn the adjustment knob clockwise. (0.5 mm per revolution)

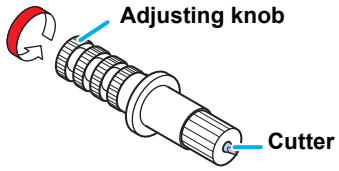

Making a Test Cut

After changing the cutting conditions or tool, make a test cut to check the items listed below. For details, see "Checking the Tool Status" (☞ P.2-18).

No.	Check Item	Check Point
(1)	Are the cutting (drawing) conditions suitable?	Work is correcly cut or drawing is not smudged.
(2)	Is tool mounted eccentrically?	An eccentric tool can cause displacement in the cutting or drawing.
(3)	Do tools match?	When a tial cutter cuts over a drawing, do the drawn and cut patterns match?

1 **Press the TEST key in LOCAL.**

<TEST CUT>
ENTER KEY to START

2 **Press the ENTER key.**

- Test cutting starts.

<TEST CUT>
A:PEN **/**

- When the cutting has been completed, the screen returns to LOCAL.

<LOCAL>
A:SWIVEL

3 **Check the cutted test pattern.**

- When the result is normal, end the operation.

Checking the Tool Status

Make a test cut using the tool selected by the Tool Select function. This section describes the check items for each tool.

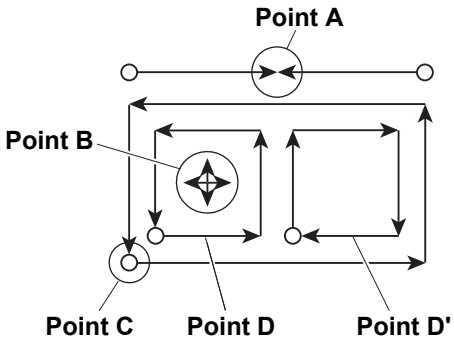

Pen

Check Point	Cause	Remedy	See page
Point A contact points do not match	Pen incorrectly mounted.	Fully tighten the holder screw.	P.1-13
Lines broken or faint	Out of ink	Replace the pen with a new one.	P.1-13
	Press value low	Increase the “PRESSURE” in the cutting conditions.	P.2-11
	Speed is too high, causing the pen to lift.	Decrease the “SPEED” in the cutting conditions.	P.2-10

Reciprocating Cutter / θ Cutter

Check Point	Cause	Remedy	See page
Point B is not in the cross	Blade of the cutter is eccentric.	Please perform the pattern B of "Adjusting Eccentricity".	P.6-5
Point A contact points do not match	“END CORR.” value too low in cutting conditions.	Increase the “END CORR.”.	P.2-11
	Blade is mounted eccentrically	Conduct Adjust Eccentricity in tool adjustments.	P.6-4
Lines displaced at Point A	Abnormal angle θ of tial cutter	Conduct Adjust θ in tool adjustments.	P.6-9
Cutting incomplete	Press value low	Increase the “PRESSURE” in the cutting conditions.	P.2-11
Cutting incomplete at corners	The “START CORR.” and “END CORR.” values in the cutting conditions are too low.	Increase the “START CORR.” and “END CORR.”.	P.2-11
D and D' have different dimensions	Blade is mounted eccentrically	Conduct Adjust Eccentricity in tool adjustments.	P.6-4
Too many cuts at Point C	“F OFFSET” or “END CORR.” value is too large.	Decrease the “END CORR.” or “END CORR.” in the cutting conditions.	P.2-11
	Blade is mounted eccentrically	Please do the pattern A of “Adjust Eccentricity” of tool adjustment. Even the adjustment value is the same, the cut amount is different by the cutter blade to be used. Please adjust to suit the purpose.	P.6-4

Crease Roller

Check Point	Cause	Remedy	See page
Point A contact points do not match	Blade is mounted eccentrically	Conduct Adjust Eccentricity in tool adjustments.	P.6-4
Lines displaced at Point A	Abnormal angle θ of crease roller	Conduct Adjust θ in tool adjustments.	P.6-9
Crease is weak	Press value low	Increase the “PRESSURE” in the cutting conditions.	P.2-11
Crease lines torn along flutes of corrugate cardboard.	Y PRESS value in the cutting conditions is too high.	Align the corrugated cardboard flutes in the Y-axis direction.	
		Decrease the “Y PRESS” in the cutting conditions.	P.2-11

Swivel Blade

Check Point	Cause	Remedy	See page
Broken lines	Swivel cutter incorrectly mounted.	Fully tighten the holder screw.	P.1-13
	Speed is too slow.	Increase the “SPEED” in the cutting conditions.	P.2-10
	Press value low	Increase the “PRESSURE” in the cutting conditions.	P.2-11
Corners rounded off	The blade does not protrude enough.	Increase the amount that the blade protrudes.	P.2-14
	Offset value is too small.	Increase the “OFFSET” in the cutting conditions.	P.2-11

Checking the Status Between Tools

Make a test cut to check the status between the tools (pen and tial cutter or pen and crease roller).

Check Method

Draw the pattern with the pen. Then make a test cut at the same position using the tial cutter or crease roller to check the status between tools.
Appropriate remedies are described below for ten types of sample.

- Some samples require the adjustment of one item, while others require the adjustment of multiple items. Refer to the sample to identify the items requiring adjustment.
- The description below refers to the pen and tial cutter. For the crease roller, read "tial cutter" as "crease roller."

Sample A 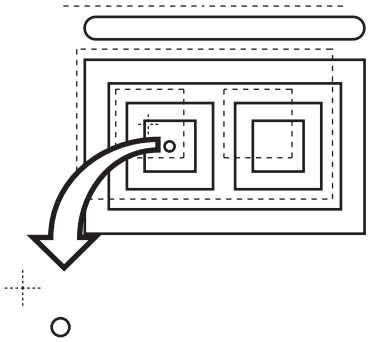	**Overview** The tial cutter is displaced with respect to the center of the pen, regardless of the direction of movement.
	Remedy Adjust the Offset in Adjust Cutter in tool adjustments. (☞ P.6-3)

Sample B 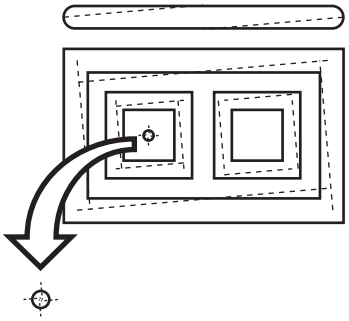	**Overview** The cut is rotated clockwise or counterclockwise.
	Remedy Conduct Adjust θ in Adjust Cutter in tool adjustments. (☞ P.6-3)

Sample C 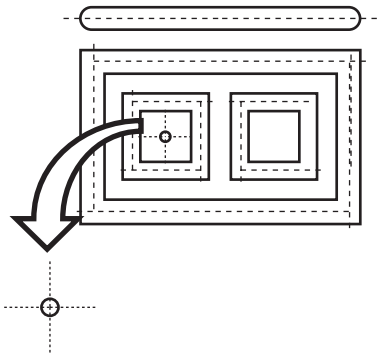	**Overview** Cutting start point is too far forward or backward.
	Remedy1 Adjust the START CORR. value in the cutting conditions. (☞ P.2-11)
	Remedy2 Adjust Pattern A in Adjust Eccentricity in Adjust Cutter in tool adjustments. (☞ P.6-3)

Sample D 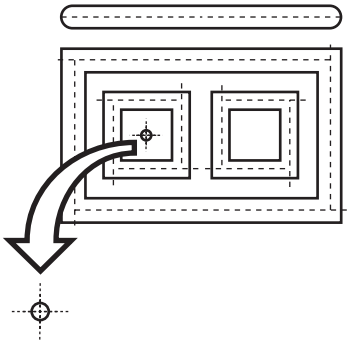	**Overview** Cutting end point is too long or too short.
	Remedy1 Adjust the END CORR. value in the cutting conditions. (☞ P.2-11)
	Remedy2 Adjust Pattern A for Adjust Eccentricity in Adjust Cutter in tool adjustments. (☞ P.6-3)

Sample E 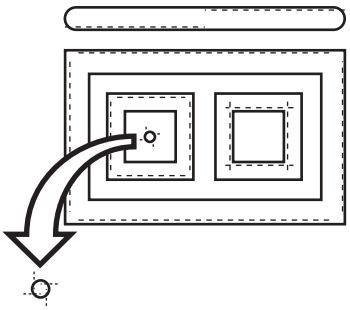	**Overview** The tial cutter is displaced to the right of the direction of movement.
	Remedy Adjust Pattern B for Adjust Eccentricity in Adjust Cutter in tool adjustments. (☞ P.6-3)

Sample F 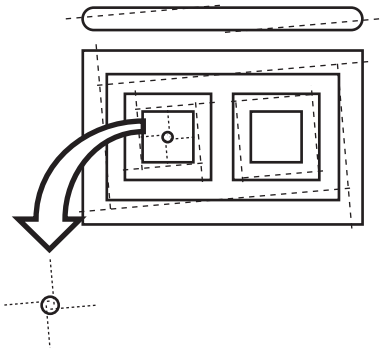	**Overview** The cut is rotated clockwise or counterclockwise, and the cutting start point is too far forward or backward.
	Remedy See the remedies described for Sample B and Sample C.

Sample G 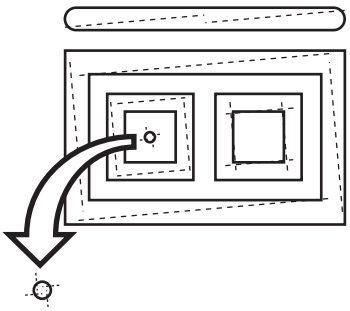	**Overview** The cut is rotated clockwise or counterclockwise, and the tial cutter is displaced to the right or left.
	Remedy See the remedies described for Sample B and Sample E.

Sample H 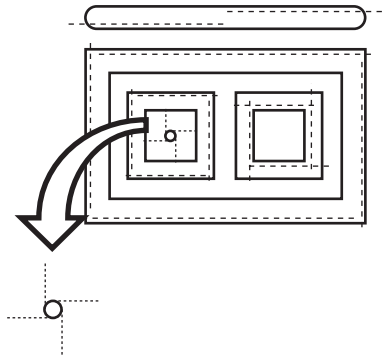	**Overview** The cutting start point is too far forward or backward, and the tial cutter is displaced to the right or left.
	Remedy See the remedies described for Sample C and Sample E.

Sample I 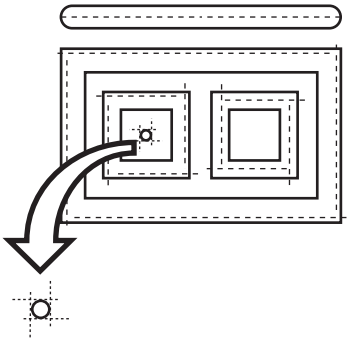	**Overview** The cutting end point is too long or too short, and the tial cutter is displaced to the right or left.
	Remedy See the remedies described for Sample D and Sample E.

Sample J 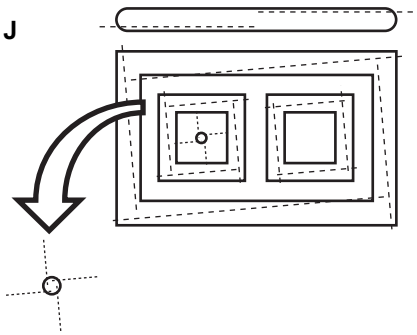	**Overview** The cut is rotated clockwise or counterclockwise, the cutting end point is too long or too short, and the tial cutter is displaced to the right or left.
	Remedy See the remedies described for Sample B, Sample D, and Sample E.

Setting the Drawing Origin

The origin is the reference point for drawing, cutting, and grid cutting. (It is normally set at the lower-left corner of the maximum effective cutting area.)
The drawing position moves as the origin is moved.

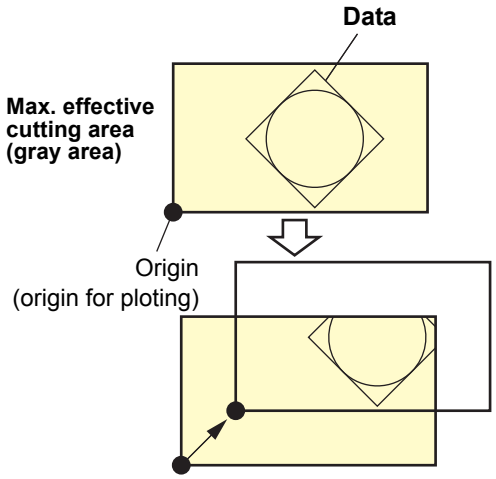

- The origin is set as coordinate position (0, 0). When the head is moved by pressing the jog keys, the screen displays the coordinates with respect to the origin.
- The Sample Cut function cuts (draws, grid cuts) the data next to the origin.

1 **Press the REMOTE key to set to the local mode.**

- Confirm in advance that if you press the REMOTE key to enter the remote mode, the plotter does not perform cutting (plotting).

```
<LOCAL>
A:PEN
```

2 **Press the jog key ▲, ▼, ◀ or ▶ to enter the jog mode.**

- Press either one of the jog keys, and you can enter the jog mode.

```
<ORIGIN SET>PEN mm
X:    0.0 Y:    0.0
```

3 **Press the jog key ▲, ▼, ◀ or ▶ to set the origin.**

4 **Press the ENTER key to decide the origin.**

- After displaying the effective cutting for while, the plotter returns to the local mode.

```
<ORIGIN SET>PEN mm
X: 300.0 Y: 300.0
```

```
<LOCAL>
A:PEN
```

Effective Cutting Area

The table below shows the maximum effective cutting area.

Model Name	X-axis (mm)	Y-axis (mm)
CFL-605RT	610	510

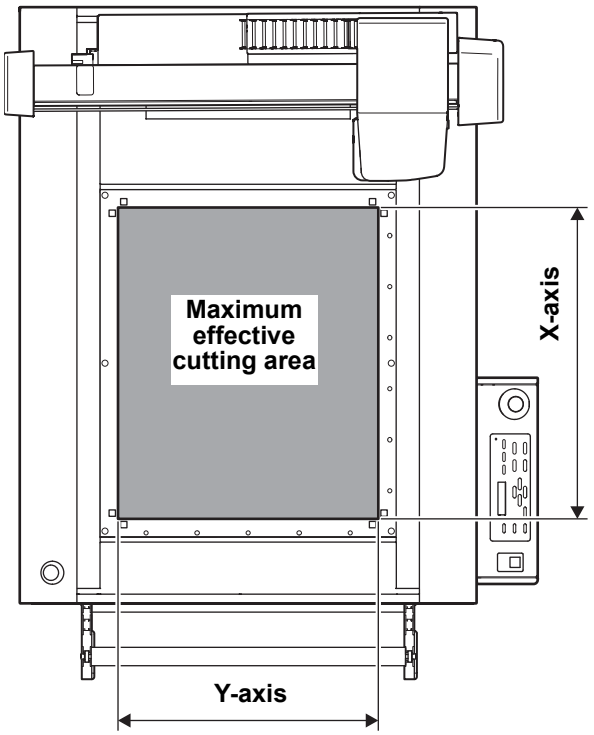

Cutting (Drawing)

1 **Set the origin and press REMOTE.**

- The remote mode is selected.

Important!

- When the mark sensor is lowered, the warning screen is shown in the display in the right. Make sure the height of mark sensor matches with the workpiece. Press the ENTER key.

```
Check MARK SENSOR
height
```

2 **Download data from the host computer.**

- Cutting starts automatically after the data is received.
- When cutting is complete, the display appears as shown to the right.

```
<REMOTE>          ****KB
B:REC.CUTTER1
```

Interrupting Processing

Follow the procedure below to interrupt data processing during drawing, cutting, or grid cutting in remote status for any reason.

1 **Press REMOTE during unit operation.**

Restarting Processing

1 **Press REMOTE.**

- The unit enters remote status and processing restarts.

Functions that Can Be Set After Interrupting Processing

● Clear the data remaining in the receive buffer

☞ P.2-26 "Interrupting Processing (Data Clear)"

Interrupting Processing (Data Clear)

In the following cases, clear the received data from the receive buffer.

(1) To clear an interrupted cutting (drawing) file from the receive buffer, without restarting processing.
(2) To clear received but unprocessed data from the receive buffer.
(3) To clear data remaining in the receive buffer before receiving data from running the SINGLE COPY function.
(4) To cut using a PC that is different from the PC that sent the cutting data the previous time.

1 **Set local status.**

- If the unit is in remote status, press REMOTE to set local status.
- Press REMOTE during data processing to interrupt the processing.



2 **Press DATA CLEAR.**



3 **Press ENTER.**

- The data is cleared.
- Press END to cancel the data clear. Return to Step 2.

Turning the Power OFF

Before turning OFF the power, confirm that no data is being received and no un-output data remains.

1 **Turn off the connected PC.**

2 **Press the power switch to turn the power OFF.**

- Push the power switch located on the operation panel.
- Power lamp goes off and power turns off.

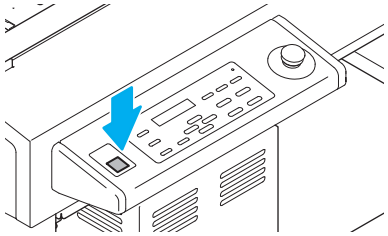

3 **Set the power switches located on the right side of this machine to the "O" side.**

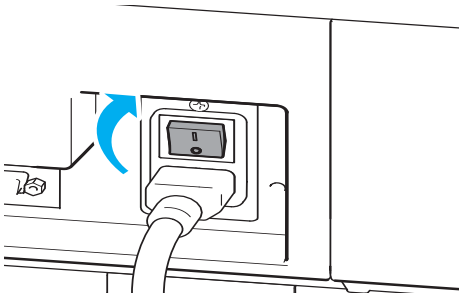

Checking Uncut Data

To cut the data	**(1)** Press REMOTE to select remote status. **(2)** Received data volume is displayed and cutting (drawing) starts.
To delete the data	**(1)** Press REMOTE to select local status. **(2)** Clear the data. (☞ P.2-26)

Chapter 3
Useful Function



This Section....

... describes the basic operations, such as mounting tools and workpieces.

List of SET UP Functions 3-2
Functions in the Jog Mode 3-5
- Setting the origin 3-5
- Two-point axis alignment 3-6
- Cutting area 3-7
- Digitization operation 3-8

Assigning Pen Numbers 3-9
Cutting the Same Data Again (Copy) ... 3-11
Setting Multi-pass Cutting..... 3-12
- Setting Multi-pass Cutting 3-12

Change the cutting (plotting) order..... 3-14
- Set SORTING 3-14

Rotating Coordinate Axes (ROTATE)... 3-15
Setting the Cutter Stroke 3-16
Setting the Displayed Units 3-17
Swivel Blade Dummy Cut..... 3-18
Setting the Displayed Language (DISPLAY)..... 3-19
Setting the Close Time 3-20
Other Useful Functions..... 3-21
- Setting a Cut Quality 3-21
- Setting speed of carriage movement 3-22
- Height setting at the pen tool lifted 3-23
- Setting of the offset value of the cutting edge correction pressure 3-24
- Make the media without uncut area 3-25
- Setting a KEY BUZZER 3-26
- Setting a START MODE 3-27
- Setting a JOG SETTING 3-28
- Setting a COMMAND 3-29
- Set the configurations with a computer ..3-32
- Set the network 3-34
- Setting event mail function 3-36
- Copy the set value from the other user setting 3-45
- Reset the setting values to the initial state. 3-46

Switch the User 3-47

List of SET UP Functions

This section describes the overview of each function to be set and set values that can be registered in user types.

Function name			Set value		Default	Outline
PLOT SETTING	PEN ASSIGN (☞P.3-9)	PEN No.: 1~6	Unit: A	PEN, SWIVEL	No.1 B:REC.CUTTER1 No.2 B:ROLLOR1 No.3 B:θCUTTER No.4 B:ROLLOR2 No.5 A:SWIVEL No.6 A:PEN	This section describes how to assign pen numbers in the data to tools on the unit.
			Unit: B	REC.CUTTER1~2, θCUTTER, ROLLER1~3		
	AFTER PLOT	AUTO VIEW (☞P.1-24)	OFF, KOW-LEFT, LOW-RIGHT, UP-LEFT, UP-RIGHT		OFF	Set the operation after the plot end.
		VACUUM (☞P.1-25)	N/C, AUTO OFF		N/V	
	CLOSE TIME(☞P.3-20)		3~30sec		3 sec	set the time to determine the end of the plotting data.
	ORIGIN(☞P.1-22)		LOW-LEFT, CENTER		LOW-LEFT	Sets the position of command origin.
	ROTATION(☞P.3-15)		ON, OFF		OFF	Switch the cutting direction.
	Z STROKE(☞P.3-16)		4~10mm, FULLUP		7mm	Set the height that the tool of B unit rises.
	SORTING(☞P.3-14)		ON, OFF		OFF	This setting changes the cutting orderand performs cutting.
	CUT MODE(☞P.3-21)		NORMAL SHARP FAST		NORMAL	This is to set the cutting quality.
	UP SPEED(☞P.3-22)		AUTO, 5, 10, 20, 30 cm/s		AUTO	Set the speed in which the carriage is moved when the tool is lifted.
	DUMMY CUT(☞P.3-18)		ON, OFF		ON	The blade edge of swivel cutter is made to turn to a specific direction before starting cutting, which allows dummy cutting.
	OVER CUT(☞P.3-25)		OFF, 0.1 ~ 1.0mm		OFF	Make the media without uncut area.
	UP HIGH(☞P.3-23)		50%, 75%, 100%		50%	Set the height when lifting the pen.
	ADJ-PRSOFFSET (☞P.3-24)		-9~+9		0	This is used to expand the value in such a case as when the beginning and end part of the cut are left cut.
MARK DETECT(☞P.4-7)						Set when cut the data with a register mark.
COMMAND SETTING	COMMAND(☞P.3-29)		MGL-IIc3		MGL-IIc3	
	PRIORITY (☞P.3-29)	SP, VS, AS, FS, ZF, ZA, ZO	HOST, PANEL		HOST	When this plotter and the host computer make different settings on a same item, this function is used to set about which of the two must be given priority to.
	OH UNIT (☞P.3-30)		INITVAL, SETVAL		SETVAL	Sets which value to return to the CAD system when the unit receives the effective area coordinate output command from the CAD system.
	GDP UNIT(☞P.3-31)		0.025mm, 0.010mm		0.025mm	This setting aligns the resolution of the unit with the resolution of the CAD system used.
BUZZER(☞P.3-26)			ON, OFF		ON	With this you can control the key-pressing sound.

Function name			Set value		Default	Outline
START MODE(☞P.3-27)			LOCAL, REMOTE		LOCAL	Set the mode after the power is turned on.
MM/INCH(☞P.3-17)			mm, inch		mm	This is to select the unit with which you want to display the length.
JOG SETTING(☞P.3-28)			JOG STEP	0.1mm, 1.0mm (1/16, 1/256 inch)	0.1mm (1/254inch)	This is to set the moving amount of carriage via the jog key.
INTERFACE	RS-232C (☞P.3-32)	BAUD RATE	1200~38400bps		38400	
		DATA BITS	7, 8 bit		8bit	
		PARITY	NON, EVEM, ODD		NON	
		STOP BITS	1, 2		1	
		HANDSHAKE	HARD, ENQACK, X-PRM, SOFT		HARD	
	NETWORK (☞P.3-34)	IP Address	————		————	The IP address currently used by this machine is displayed.
		MAC Address	————		————	The MAC address currently used by this machine is displayed.
		DHCP	ON		ON	When it is ON, the IP address given by the DHCP server is used.
			OFF			
		AutoIP	ON		ON	When it is ON, the IP address is determined by the AutoIP protocol. However, DHCP is ON, DHCP has priority.
			OFF			
		IP Address *1	————		————	Set the IP address used by this machine.
		Def.Gateway *2	————		————	Set the default gateway used by this machine.
		DNS Address *2	————		————	Set the DNS server address used by this machine.
		SubNetMask *2	————		————	Set the digit number of the subnet mask used by this machine.
	EVENT MAIL (☞P.3-36)	Delivery	ON		OFF	When the set event occurs, the function to send the e-mail becomes ON.
			OFF			When the set event occurs, the function to send the e-mail becomes OFF.
		EVENT	Plot Start Event	ON	OFF	Set whether you send/ do not send the e-mail at the start of plotting.
				OFF		
			Plot End Event	ON	OFF	Set whether you send/ do not send the e-mail at the end of plotting.
				OFF		
			Error Event	ON	OFF	Set whether you send/ do not send the e-mail when an error occurs.
				OFF		
			Warning Event	ON	OFF	Set whether you send/ do not send the e-mail when a warning occurs.
				OFF		
		Mail Addr.	Alphanumeric characters and symbols (within 96characters)		————	Set the e-mail address towhich you send the event mail.
		Subject	Alphanumeric characters and symbols (within 8characters)		————	Set the characters to write inthe subject of the event mail.

*1. Settable when both of DHCP and AutoIP are [OFF]

*2. Settable only when Auth. is not OFF

Function name			Set value		Default	Outline
INTERFACE	EVENT MAIL (☞P.3-36)	SERVER	SMTP Addr.		————	Set the SMTP server.
			SMTP Port		25	Set the SMTP port number.
			SENDER Addr.		————	Set the e-mail address to be used as the sender mail address.
			Auth.	POP before SMTP	POP before SMTP	Set the SMTP server authentication method.
				SMTP Auth		
				OFF		
			User Name *1		————	Set the user name used for the authentication.
			Pass Word *1		————	Set the password used for the authentication.
			POP3 Addr. *2		————	Set the POP server.
			APOP *2		OFF	Set ON/ OFF of APOP.
		TEST	————		————	Send the test e-mail.
SETTING COPY(☞P.3-45)			————		————	Copy the set value to other user setting.
SETUP RESET(☞P.3-46)			————		————	Reset the setting values to the initial state.

*1. Settable only when Auth. is not OFF
*2. Settable only when Auth. is POP before SMTP

Functions in the Jog Mode

Press the jog key ▲ , ▼ , ◀ or ▶ in the local mode, and then you can enter the jog mode, where you can perform the following settings.

Function names	Contents	Reference page
Setting the origin	Set the point from which the plotter will start cutting (plotting).	P.3-5
Two-point axis alignment	If a ruled sheet is set, align the horizontal and vertical axes with the appropriate lines on the sheet.	P.3-6
Cutting area	Set the area in which the plotter performs cutting (plotting).	P.3-7
Up and Down of the Pen	This is to put up and down the tool. (Press the TOOL key in the jog mode).	-

Important!

- Before you set the function in the jog mode, be sure to confirm that there is no cutting (plotting) data.
- If specify a location such as the origin in jog mode, the center of the selected tool becomes the designated position regardless on / off of the light pointer.
  Tool in selection is appeared in the first line of the LCD display.

Setting the origin

1 **Press the REMOTE key to set to the local mode.**

- Confirm in advance that if you press the REMOTE key to enter the remote mode, the plotter does not perform cutting (plotting).

```
<LOCAL>
A:PEN
```

2 **Press the jog key ▲ , ▼ , ◀ or ▲ to enter the jog mode.**

- Press either one of the jog keys, and you can enter the jog mode.

```
<ORIGIN SET>PEN mm
X:    0.0 Y:    0.0
```

3 **Press the jog key ▲ , ▼ , ◀ or ▲ to set the origin.**

4 **Press the ENTER key to decide the origin.**

- After displaying the effective cutting for while, the plotter returns to the local mode.

```
*ORIGIN SET*
X: 300.0 Y: 300.0
```

⇩

```
<LOCAL>
A:PEN
```

- Head movement speed is low when the jog key is to be pressed and becomes gradually faster when keep pressing.
  When the tool is lowered, it moves at the cut speed.

Two-point axis alignment

If a ruled sheet is set, align the horizontal and vertical axes with the appropriate lines on the sheet.
Correct the axial inclination (θ) by setting a compensation point in combination with the origin.

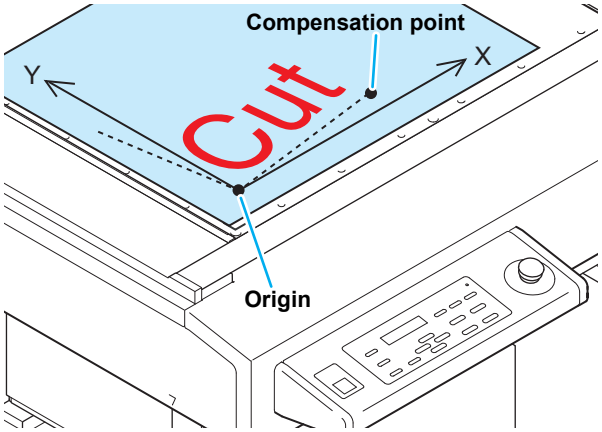

1 **Press the REMOTE key to set to the local mode.**

- Confirm in advance that even if you press the REMOTE key to enter the remote mode, the plotter does not perform cutting (plotting).

```
<LOCAL>
A:PEN
```

2 **Set the Origin by pressing the jog key ▲, ▼, ◀ or ▶ to and press the ENTER key.**

3 **Press the jog key ▲, ▼, ◀ or ▲ to enter the jog mode.**

- Press either one of the jog keys, and you can enter the jog mode.

```
<ORIGIN SET>PEN mm
X:    0.0 Y:    0.0
```

4 **Press the VIEW key.**

```
<AXISS COR>      mm
X:+0000.0 Y:+0000.0
```

5 **Press the jog key ▲, ▼, ◀ or ▲ to set the compensation point.**

- θ= -45 degrees to 45 degrees

6 **Press the ENTER key to decide the origin.**

- The display is as shown on the right briefly, after which the plotter returns to the local mode.

```
*AXISS CORRECT*
  th= 10.0°
```

⇩

```
<LOCAL>
A:PEN
```

Cutting area

Set the area in which the plotter performs cutting (plotting). The area that has a diagonal line extending from the origin to a given UR (upper right) point is the available cutting area. The cutting area setting will be cleared by turning the power off.

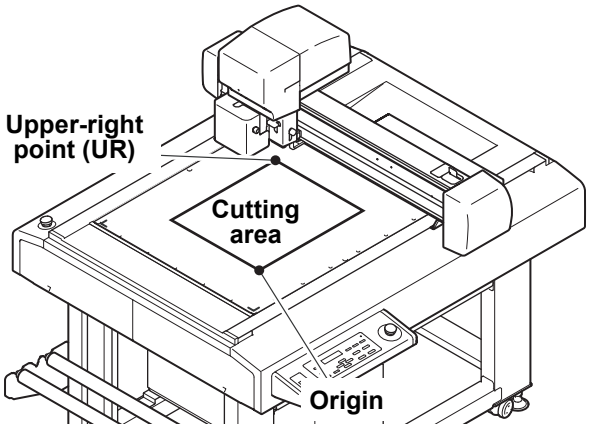

1 **Press the REMOTE key to set to the local mode.**

- Confirm in advance that even if you press the REMOTE key to enter the remote mode, the plotter does not perform cutting (plotting).

```
<LOCAL>
A:PEN
```

2 **Press the jog key ▲, ▼, ◀ or ▲ to enter the jog mode.**

- Press either one of the jog keys, and you can enter the jog mode.

```
<ORIGIN SET>PEN mm
X:    0.0 Y:    0.0
```

3 **Press the AREA key.**

```
<CUT AREA>        mm
X:+0000.0 Y:+0000.0
```

4 **Press the jog key ▲, ▼, ◀ or ▲ to set the point UR.**

5 **Press the ENTER key to decide the point UR.**

- The display is as shown on the right briefly, after which the plotter returns to the local mode.

```
*CUT AREA*
X: 300.0 Y: 300.0
```

⇩

```
<LOCAL>
A:PEN
```

Important!

- Be sure to set the upper right point in the area located in the normal direction from the origin.
- Be sure to set the origin in the cutting area. If the origin is located outside the cutting area, the plotter will go into an error state.

Digitization operation

The coordinates of the plotted figure relative to the origin are displayed on the host computer.
Upon receiving the digitization command (DP;) from the host computer, the plotter is ready for digitization operation.
To conduct digitization, install a sheet with patterns to select points on it.

- The digitization operation is available only with an application software that incorporates a digitization function. Refer to the instruction manual for the application software for how to use the digitization function.

1 Set the plotter in the remote mode and make it receive the digitization command from the host computer.

- The display will change as shown at right.

<REMOTE> 1356KB
PEN 20 120

<REMOTE> 1356KB
** DIGITIZE **

2 Move the pen with a jog key ▲ ▼ ◀ or ▲ until the pen tip reaches a given point of the pattern.

<DIGITIZE> mm
X: 100.0 Y: 250.5

- The coordinates relative to the origin will be displayed.
- If you set the step to a smaller value using the jog step function, you may select a desired point with increased accuracy. (☞ P.3-78)

3 Press the ENTER key.

<REMOTE> 1356KB
** DIGITIZE **

- The plotter records the point of the pen head.
- The plotter receives the coordinate output command (OD;) from the host computer.

Assigning Pen Numbers

This section describes how to assign pen numbers in the data to tools on the unit.
For this unit, up to six pens can be assigned to each tool.

This example describes how to make the following settings.

Pen 1 (pen number in drawing data) : Set to PEN.
Pen 2 (pen number in cutting data) : Set to REC.CUTTER1.

The following settings allow simultaneous drawing and cutting of Pen 1 and Pen 2 data.

1 Select [PLOT SETTING] of the set up menu.

(1) Press the FUNCTION key in LOCAL.
(2) Press ▲ ▼ to select [SET UP] and press the ENTER key.
(3) Press ▲ ▼ to select [PLOT SETTING].
(4) Press the ENTER key.

2 Press the jog key ▲ or ▼ to select [PEN ASSIGN], and ress the ENTER key.

- Tool name displays the current settings.

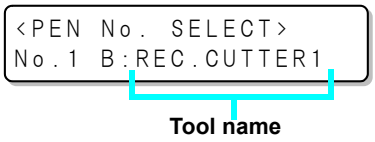

3 Press the jog key ▲ or ▼ and select the pen number to be set

- Here select pen number "1".
- Set values: 1 to 6



4 Press the ENTER key.

5 Press the jog key ▲ or ▼ to select unit.

- Here choose the unit "A".
- Set values: A, B



6 Press the ENTER key.

7 Press the jog key ▲ or ▼ to select tool.

- The set values differ according to the mounted tools.
- Here choose the tool "PEN".
- Unit A: PEN, SWIVEL
- Unit B: REC.CUTTER1 to 2, θCUTTER, ROLLER1 to 3



8 Press the ENTER key.



9 **Press the ENTER key.**

<PEN No. SELECT>
No.1 A:PEN

10 **Press the jog key ▲ or ▼ and select the pen number to be set**

- Here select the pen number "2".
- Set values: 1 to 6

<PEN No. SELECT>
No.2 B:ROLLER1

11 **Press the ENTER key.**

12 **Press the jog key ▲ or ▼ to select unit.**

- Here choose the unit "B".
- Set values: A, B

<PEN ASSIGN>
No.2 B:ROLLER1

13 **Press the ENTER key.**

14 **Press the jog key ▲ or ▼ to select tool.**

- The set values differ according to the mounted tools.
- Here choose the tool "REC.CUTTER1".
- Unit A: PEN, SWIVEL
- Unit B: REC.CUTTER1 to 2, θCUTTER, ROLLER1 to 3

<PEN ASSIGN>
No.2 B:REC.CUTTER1

15 **Press the ENTER key.**

- If set the other pen number, repeat the operation from step 5 to 10.

<PLOT SETTING>
PEN ASSIGN [ENT]

16 **Press the END key twice for terminating this function.**

- The initial value of each pen number is as follows.

Tool number	Unit / Tool
1	B / REC.CUTTER1
2	B / ROLLER1
3	B / θCUTTER
4	B / ROLLER2
5	A / SWIVEL
6	A / PEN

Cutting the Same Data Again (Copy)

Previously cut data can be cut again in offline status.
This eliminates the need to send the same data many times from the PC.

Caution

- Use DATA CLEAR to clear (☞ P.2-26) the receive buffer before receiving the data to be copied. If the data is not cleared, the other data in the receive buffer will be copied.

1 **Clear the data (☞ P.2-26).**

- Clear the data immediately before receiving the data to copy.

2 **Cut the data to copy (☞ P.2-24).**

3 **Press REMOTE to select local status.**

```
<COCAL>
B:REC.CUTTER1
```

4 **Press a jog key ▲ ▼ ◀ ▶ to move the origin (☞ P.2-23).**

- Reset the origin to the position to be copied. Failure to reset the origin results in cutting at the same position.

5 **Press COPY .**

```
<COPY>
COPY                    [ENT]
```

6 **Press ENTER to copy the data.**

- Press END to cancel the copy.
- When copying is complete, the display reverts to the remote status.
  Head withdrawal follows the setting of [AFTER PLOT] - [AUTO VIEW]. (☞ P.1-24)
- To cut once more, repeat the procedure from Step 4.

```
<COPY>              ****KB
B:REC.CUTTER1
```

Setting Multi-pass Cutting

Setting Multi-pass Cutting

While changing the press value, can cut the same data up to 9 times for each tool.
This is an effective means of cutting a workpiece that cannot be cut in one pass.

Important!

- Set the cut start time (Close time ☞ P.3-20) that sets the delimiter between data. Multi-pass cutting starts if the next data is not received within the set time.

Set Item	Set value	Description
PASS	OFF, 2 to 9	Set the number of copies you want to cut.
2nd PRESS	30 g to 1500 g*1	Sets the press value for the second cut.
3rd PRESS		Sets the press value for the third cut.
4th PRESS		Sets the press value for the fourth cut.
5th PRESS		Sets the press value for the fifth cut.
6th PRESS		Sets the press value for the sixth cut.
7th PRESS		Sets the press value for the seventh cut.
8th PRESS		Sets the press value for the eighth cut.
9th PRESS		Sets the press value for the ninth cut.

*1. The set values differ according to the unit.
REC.CUTTER/θCUTTER/ROLLER: 500 g to 1500 g(When vibration is on, 1500g fixed)
SWIVEL: 30 g to 1000 g

1 **Press the (FUNCTION) key in LOCAL**

```
<FUNCTION>
SET UP          [ENT]
```

2 **Press (▲) (▼) and select [MULTI PASS].**

```
<FUNCTION>
MULTI PASS      [ENT]
```

3 **Press (ENTER).**

```
<MULTI PASS>
TOOL : B:REC.CUTTER
```

4 **Press (▲) (▼) and select TOOL.**

```
<TOOL SELECT>
TOOL : A:SWIVEL    /1
```

Important!

- Behind the tool, display the number of times currently set.
  -: OFF
  2 ~ 9: Setting

- Set value: REC.CUTTER1~2, θCUTTER, ROLLER1~3, SWIVEL

5 **Press (ENTER).**

```
<TOOL SELECT>
PASS: OFF
```

6 **Press (▲) (▼), select the number of times to cut and press (ENTER).**

```
<MULTI PASS>
PASS: 3TIMES
```

- Set value: OFF, 2 to 9 TIMES

7 **Press ▲ ▼, select the number of times to set the cut press value and press ENTER.**

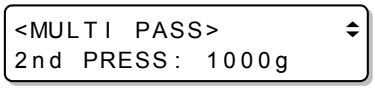

8 **Set the cut press value by pressing the jog key ▲ ▼ and press the ENTER.**

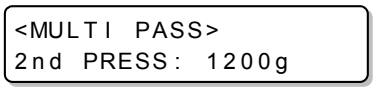

- The press value settings are saved.
- Press END if you do not want to save the settings.
- The set values differ according to the unit.
  REC.CUTTER/θCUTTER/ROLLER: 500 g to 1500 g
  SWIVEL: 30 g to 1000 g

9 **Repeat steps 7-8 to set the pressure value for each cut number.**

Important!

- In order to make the multi-pass cutting with FineCut function, set “Off” in step 6 and set at the output setting in FineCut.
- If the multi-pass cutting is set in both FineCut and the machine, the number will be duplicated.
  Example) 3times in the machine side and 2 times in FineCut will be 6 times in total
- If the multi-pass cut is set, the drawing starts from the roller. After the cutting of the roller is finished, the drawing of the reciprocating cutter, eccentric cutter and tangential cutter follow.

Change the cutting (plotting) order

You can reorder or sort the cut data that has been sent from the host computer to change the order for cutting (SORTING function).
Suppose that there is data that you want to cut just like drawing a picture with a single stroke, according the order in which data is sent from application software. But in case you cannot do it in one continuous pen stroke, you can change the cutting order to make it.

You cannot perform such one-stroke cutting in the following cases

Some applications software send data to the plotter in the order that the data has been created and edited.

- For example, in case you have modified the data read in via scanner, you cannot cut it in one stroke as the modified part is cut later.

When you want to cut after SORTING

With the sorting function, the plotter handles a piece of data corresponding to each cutting operation that starts with pen down and ends with pen up as one block. After the completion of cutting one block, the plotter will perform cutting of another block whose starting point is closest to the finished block.

For data transmitted from the host computer, the starting position and cutting direction will not be changed.

● : Starting point of data = Starting point of cutting
Arrow : Direction of data = Cutting direction
Number : Block cutting order

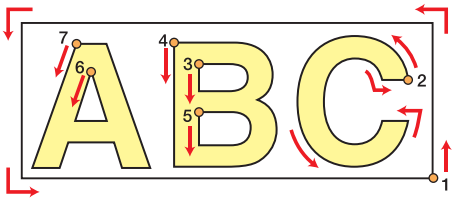

Set SORTING

1 **Select [PLOT SETTING] of the set up menu.**

(1) Press the FUNCTION key in LOCAL.
(2) Press ▲ ▼ to select [SET UP] and press the ENTER key.
(3) Press ▲ ▼ to select [PLOT SETTING].
(4) Press the ENTER key.

2 **Press the jog key ▲ or ▼ to select [SORTING], and ress the ENTER key.**

```
<PLOT SETTING>
SORTING  :OFF
```

3 **Press the jog key ▲ or ▼ to select Setting.**

- Setting values : ON, OFF

```
<PLOT SETTING>
SORTING  :ON
```

4 **Press the ENTER key.**

- Press END if you do not want to save the setting.

Important!

- Changing the setting value will clear the data in the receiver buffer.
- Setting the sorting function to ON will decrease the size of the receiver buffer to about 17MB.

Rotating Coordinate Axes (ROTATE)

This function sets the location of origin and direction of the axes of coordinates according to the application software to be used. (ROTATION function)

Rotating function : OFF

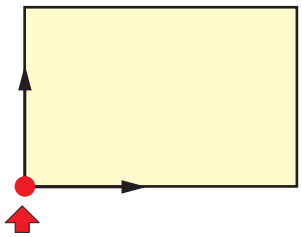

Origin

Rotating function : ON

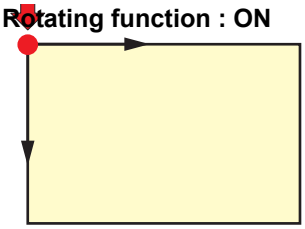

Origin

Important!

- Confirm that any data to be cut is not saved in the receiving buffer. If you change the set values, the contents of the receiving buffer are cleared completely.
- Rotation cannot be enabled if the register mark detection function is enabled. First turn off the register mark function before enabling rotation. (☞ P.4-9)
- The cut area settings are returned to the default settings if the rotation settings are changed.

1 Select [PLOT SETTING] of the set up menu.

(1) Press the FUNCTION key in LOCAL.
(2) Press ▲ ▼ to select [SET UP] and press the ENTER key.
(3) Press ▲ ▼ to select [PLOT SETTING].
(4) Press the ENTER key.

2 Press the jog key ▲ or ▼ to select [ROTATION], and ress the ENTER key.

```
<PLOT SETTING>
ROTATION :OFF
```

3 Press the jog key ▲ or ▼ to select Setting.

```
<PLOT SETTING>
ROTATION :ON
```

- ON : Performs the rotation of the axes of coordinates and the movement of the origin at the same time.
- OFF : Does not perform the rotation.

4 Press the ENTER key.

- Press END if you do not want to save the setting.

5 Press the END key twice for terminating this function.

Setting the Cutter Stroke

This setting shortens the distance that the tool rises when cutting (or drawing) data with frequent up/down movements of the tial cutter or grid roller. It thereby reduces the total cutting time.

1 **Select [PLOT SETTING] of the set up menu.**

(1) Press the FUNCTION key in LOCAL.
(2) Press ▲ ▼ to select [SET UP] and press the ENTER key.
(3) Press ▲ ▼ to select [PLOT SETTING].
(4) Press the ENTER key.

2 **Press the jog key ▲ or ▼ to select [Z STROKE], and ress the ENTER key.**

```
<PLOT SETTING>
Z STROKE :7mm
```

3 **Press the jog key ▲ or ▼ to select setting value.**

• Set values: 4 to 10 mm, FULLUP

```
<PLOT SETTING>
ROTATION :ON
```

4 **Press the ENTER key.**

• Press END if you do not want to save the setting.

5 **Press the END key twice for terminating this function.**

Setting the Displayed Units

Sets the units for the values displayed on the screen.

Set value	Description
mm	Displays millimeters.
inch	Displays inches.

1 **Press the FUNCTION key in the local mode.**

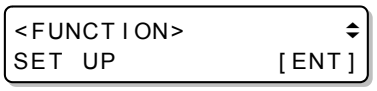

2 **Press the jog key ▲ or ▼ to select [SET UP], and ress the ENTER key.**



3 **Press the jog key ▲ or ▼ to select [MM/INCH], and ress the ENTER key.**

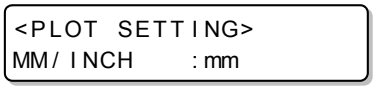

4 **Press the jog key ▲ or ▼ to select setting value.**



- Set values: mm , inch

5 **Press the ENTER key.**

- Press END if you do not want to save the setting.

6 **Press the END key twice for terminating this function.**

Swivel Blade Dummy Cut

When turn on the power in the state that set the swivel cutter in the tool set, or when select the swivel cutter after the power is turned on,
dummy cut is made outside the effective cutting area in order to direct the cutting edge of the swivel cutter in the traveling direction.

Set value	Description
OFF	Makes no dummy cut.
ON	Makes a dummy cut.

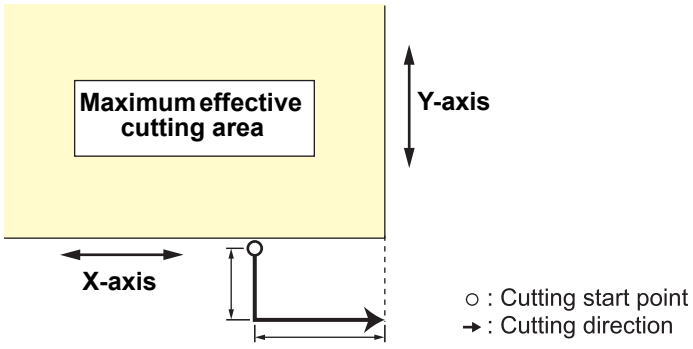

1 Select [PLOT SETTING] of the set up menu.

(1) Press the FUNCTION key in LOCAL.
(2) Press ▲ ▼ to select [SET UP] and press the ENTER key.
(3) Press ▲ ▼ to select [PLOT SETTING].
(4) Press the ENTER key.

2 Press the jog key ▲ or ▼ to select [DUMMY CUT], and ress the ENTER key.

```
<PLOT SETTING>
DUMMY CUT:ON
```

3 Press the jog key ▲ or ▼ to select setting value.

```
<PLOT SETTING>
DUMMY CUT:ON
```

• Set values: OFF, ON

4 Press the ENTER key.

• Press END if you do not want to save the setting.

5 Press the END key twice for terminating this function.

Setting the Displayed Language (DISPLAY)

Select English or Japanese as the displayed language.

1 **Press the FUNCTION key in LOCAL**

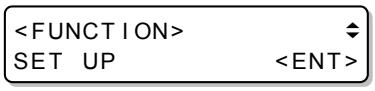

2 **Press ▲ ▼ and select [DISPLAY].**

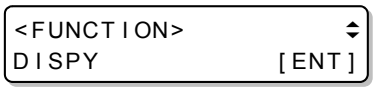

3 **Press ENTER.**



4 **Press ▲ ▼ and select TOOL.**

- Set value: CUTTER, ROLLER, SWIVEL



5 **Press the ENTER key.**

- Press END if you do not want to save the setting.

6 **Press the END key twice for terminating this function.**

Setting the Close Time

After cutting (plotting) the data that was sent from PC, following operation starts automatically at the time that had been set in advance.

- Data clear (☞ P.2-26)
- Automatic Head Retraction (☞ P.1-24)
- Vacuum Automatic OFF (☞ P.1-25)
- Multi-pass Cutting (☞ P.3-12)

1 Select [PLOT SETTING] of the set up menu.

(1) Press the FUNCTION key in LOCAL.
(2) Press ▲ ▼ to select [SET UP] and press the ENTER key.
(3) Press ▲ ▼ to select [PLOT SETTING].
(4) Press the ENTER key.

2 Press the jog key ▲ or ▼ to select [CLOSE TIME], and ress the ENTER key.

<PLOT SETTING>
CLOSE TIME : 3sec

3 Press the jog key ▲ or ▼ to select the set value.

- Set values: 3 s to 30 s

<PLOT SETTING>
CLOSE TIME :10sec

4 Press the ENTER key.

- Press END if you do not want to save the setting.

5 Press the END key twice for terminating this function.

Setting a Cut Quality

This is to set the cutting quality.

1 **Select [PLOT SETTING] of the set up menu.**

(1) Press the FUNCTION key in LOCAL.
(2) Press ▲ ▼ to select [SET UP] and press the ENTER key.
(3) Press ▲ ▼ to select [PLOT SETTING].
(4) Press the ENTER key.

2 **Press the jog key ▲ or ▼ to select [CUT MODE], and ress the ENTER key.**

```
<PLOT SETTING>
CUT MODE :NORMAL
```

3 **Press the jog key ▲ or ▼ to select Setting.**

```
<PLOT SETTING>
CUT MODE :QUALITY
```

• Set values:
NORMAL : This is a regular cutting mode.
SHARP : This is a cutting mode used to give priority to cutting quality.
FAST : This is used to perform cutting in a short time.

4 **Press the ENTER key.**

• Press END if you do not want to save the setting.

5 **Press the END key twice for terminating this function.**

• Select “QUALITY” in any of the following cases:
a Characters whose sizes are 10 mm or less are to be cut
b Picture patterns or characters that have many sharp corners are to be cut
c Minute cutting is to be performed
However, the edges of finished patterns may be rugged if the data sent from the host computer is too complicated. In such a case, select “FAST” for smooth finish.

Setting speed of carriage movement

This is to set the speed of carriage movement when the tool is up.

1 **Select [PLOT SETTING] of the set up menu.**

(1) Press the FUNCTION key in LOCAL.
(2) Press ▲ ▼ to select [SET UP] and press the ENTER key.
(3) Press ▲ ▼ to select [PLOT SETTING].
(4) Press the ENTER key.

2 **Press the jog key ▲ or ▼ to select [UP SPEED], and press the ENTER key.**

```
<PLOT SETTING>
UP SPEED :AUTO
```

3 **Press the jog key ▲ or ▼ to select Setting.**

• Set values: AUTO, 5, 10, 20, 30cm/s

```
<PLOT SETTING>
UP SPEED :10cm/s
```

4 **Press the ENTER key.**

• Press END if you do not want to save the setting.

5 **Press the END key twice for terminating this function.**

Height setting at the pen tool lifted

Set the height when lifting the tool.

1 **Select [PLOT SETTING] of the set up menu.**

(1) Press the FUNCTION key in LOCAL.
(2) Press ▲ ▼ to select [SET UP] and press the ENTER key.
(3) Press ▲ ▼ to select [PLOT SETTING].
(4) Press the ENTER key.

2 **Press the jog key ▲ or ▼ to select [UP HIGHT], and press the ENTER key.**

```
<PLOT SETTING>
PEN UP HIGHT : 50%
```

3 **Press the jog key ▲ or ▼ to select Setting.**

- For thick media or when the cutter scratches the media because the sheet is not flat, set the amount of lifting bigger.
- Set values: 50%, 75%, 100%

```
<PLOT SETTING>
PEN UP HIGHT : 75%
```

4 **Press the ENTER key.**

- Press END if you do not want to save the setting.

5 **Press the END key twice for terminating this function.**

Setting of the offset value of the cutting edge correction pressure

Set when there is an uncut at the start point and end point of the cut.

1 **Select [PLOT SETTING] of the set up menu.**

(1) Press the FUNCTION key in LOCAL.
(2) Press ▲ ▼ to select [SET UP] and press the ENTER key.
(3) Press ▲ ▼ to select [PLOT SETTING].
(4) Press the ENTER key.

2 **Press the jog key ▲ or ▼ to select [ADJ-PRS OFFSET], and ress the ENTER key.**

<PLOT SETTING>
ADJ-PRS OFFSET: 0

3 **Press the jog key ▲ or ▼ to select Setting.**

- Set values: -9 ~ +9 (Around -30g to around 30g)

<PLOT SETTING>
ADJ-PRS OFFSET: 3

4 **Press the ENTER key.**

- Press END if you do not want to save the setting.

5 **Press the END key twice for terminating this function.**

Make the media without uncut area

By over lapping the start point and the end point arbitrarily, you can make the media without uncut area.
Specify the over cut function (valid/invalid) and the length of the over cut. If the length of the over cut is set, when cut starts, cut will be performed from the position to the front by the specified length and the tool will move up going too far at the end.
Additionally, perform over-cutting of corners other than the start and end points.

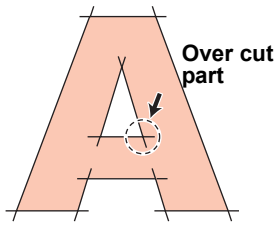

Important!

- Setting proper over cut can reduce uncut area of start and end point of a media easy to bend. If too large value is set, the result may have a rupture.
- Over cut is only applicable at the drawing of the eccentric cutter.

1 Select [PLOT SETTING] of the set up menu.

(1) Press the FUNCTION key in LOCAL.
(2) Press ▲ ▼ to select [SET UP] and press the ENTER key.
(3) Press ▲ ▼ to select [PLOT SETTING].
(4) Press the ENTER key.

2 Press the jog key ▲ or ▼ to select [OVER CUT], and ress the ENTER key.

```
<PLOT SETTING>
OVER CUT :OFF
```

3 Press the jog key ▲ or ▼ to select OVER CUT setting.

```
<PLOT SETTING>
OVER CUT :1.0mm
```

- Setting value: OFF or a value from 0.1 to 1.0mm (0.1mm unit)

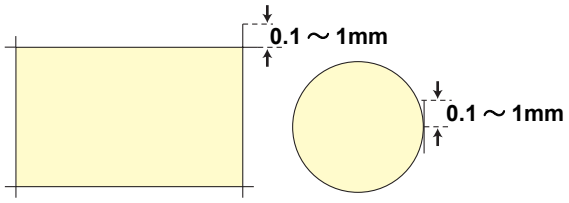

4 Press the ENTER key.

- Press END if you do not want to save the setting.

5 Press the END key twice for terminating this function.

Setting a KEY BUZZER

You can turn off the buzzer sound when pressing the key.

1 **Press the FUNCTION key in LOCAL.**

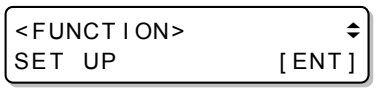

2 **Press ▲ ▼ to select [SET UP].**

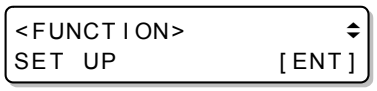

3 **Press the ENTER key.**



4 **Press ▲ ▼ to select [BUZZER].**

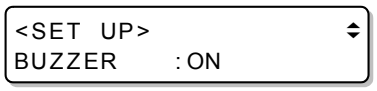

5 **Press the ENTER key.**

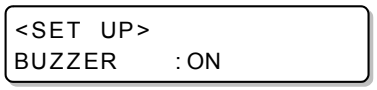

6 **Press ▲ ▼ to select ON/OFF.**



7 **Press the ENTER key.**



8 **Press the END key several times to end the setting.**

- When the key buzzer is set to "OFF", the buzzer sound for errors, warnings, operation completion, etc. cannot be shut off.

Setting a START MODE

Set the mode after power ON.

1 **Press the FUNCTION key in LOCAL.**

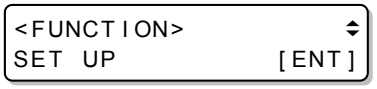

2 **Press ▲ ▼ to select [SET UP].**

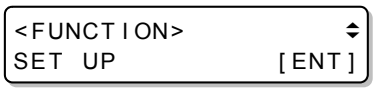

3 **Press the ENTER key.**



4 **Press ▲ ▼ to select [START MODE].**



5 **Press the ENTER key.**



6 **Press ▲ ▼ to select LOCAL/REMOTE.**

• Set values: LOCAL, REMOTE



7 **Press the ENTER key.**



8 **Press the END key several times to end the setting.**

Setting a JOG SETTING

This is to set the moving amount of carriage via the jog key.

1 **Press the (FUNCTION) key in LOCAL.**

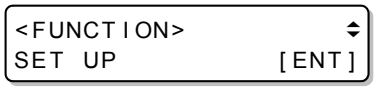

2 **Press (▲)(▼) to select [SET UP].**

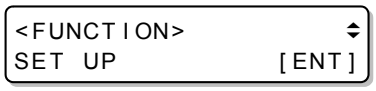

3 **Press the (ENTER) key.**



4 **Press (▲)(▼) to select [JOG SETTING].**



5 **Press the (ENTER) key.**

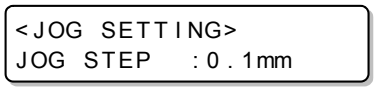

6 **Press (▲)(▼) to select set values.**

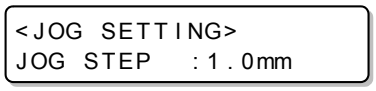

- Set values: set in mm
  0.1mm: 0.1mm movement per jog key operation
  1.0mm: 1.0mm movement per jog key operation
- Set values: Set in inch
  1/16inch: 1/16 inch movement per jog key operation
  1/254inch: 1/254 inch movement per jog key operation

7 **Press the (ENTER) key.**

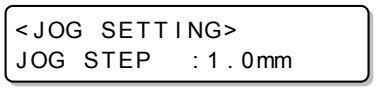

8 **Press the (END) key several times to end the setting.**

Setting a COMMAND

Setting a PRIORITY

When this plotter and the host computer make different settings on a same item, this function is used to set about which of the two must be given priority to

1 **Select [COMMAND SETTING] of the set up menu.**

(1) Press the FUNCTION key in LOCAL.
(2) Press ▲ ▼ to select [SET UP] and press the ENTER key.
(3) Press ▲ ▼ to select [COMMAND SETTING].
(4) Press the ENTER key.

2 **Press the jog key ▲ or ▼ to select [PRIORITY] .**

<SET UP>
RS-232C [ENT]

3 **Press the ENTER key.**

<RS SETTING>
BAUD RATE :9600

4 **Press the jog key ▲ or ▼, select the item to be set.**

<PRIORITY>
ZO :HOST

SP;	Pen selection command
VS;	Pen lowering speed setting command
ZA;	Pen lifting speed setting command
AS;	Acceleration setting command
FS;、ZF;	Pen pressure setting command
ZO;	Cutter blade compensation setting command

5 **Press the ENTER key.**

<PRIORITY>
ZO :HOST

1 **Press the jog key ▲ or ▼ to select Setting.**

<PRIORITY>
ZO :PANEL

- Set values:
  HOST: This is to give priority to the setting of host computer.
  PANEL: This is to give priority to the setting of this plotter.
- If set other items, repeat the procedure from step 4 to 7.

6 **Press the ENTER key.**

- Press END if you do not want to save the setting.

<SET UP>
START MODE:REMOTE

7 **Press the END key several times to end the setting.**

Setting the Effective Area Return Values (OH UNIT)

Sets which value to return to the CAD system when the unit receives the effective area coordinate output command from the CAD system.
INITIAL: Return the maximum value of the effective cutting area of the machine.
SET VAL: Returns the value that was set in the configuration of the cut area.

1 **Select [COMMAND SETTING] of the set up menu.**

(1) Press the FUNCTION key in LOCAL.
(2) Press ▲ ▼ to select [SET UP] and press the ENTER key.
(3) Press ▲ ▼ to select [COMMAND SETTING].
(4) Press the ENTER key.

2 **Press the jog key ▲ or ▼ to select [OH UNIT].**

<COMMAND SETTING>
OH; UNIT :INITVAL

3 **Press the ENTER key.**

<COMMAND SETTING>
OH; UNIT :INITVAL

4 **Press the jog key ▲ or ▼ to select Setting.**

• Set values: INITVAL, SETVAL

<COMMAND SETTING>
OH; UNIT :SETVAL

5 **Press the ENTER key.**

• Press END if you do not want to save the setting.

6 **Press the END key several times to end the setting.**

Resolution (GDP *1) Setting

This setting aligns the resolution of the unit with the resolution of the CAD system used.
For more information on the resolution of the CAD system, see the CAD Instruction Manual.

1 **Select [COMMAND SETTING] of the set up menu.**

(1) Press the FUNCTION key in LOCAL.
(2) Press ▲ ▼ to select [SET UP] and press the ENTER key.
(3) Press ▲ ▼ to select [COMMAND SETTING].
(4) Press the ENTER key.

2 **Press the jog key ▲ or ▼ to select [GDP UNIT].**

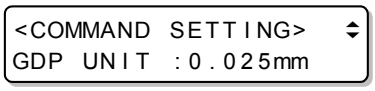

3 **Press the ENTER key.**

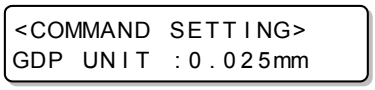

4 **Press the jog key ▲ or ▼ to select Setting.**

• Set values:0.025mm, 0.010mm

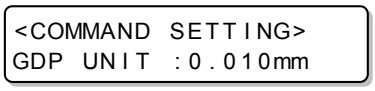

5 **Press the ENTER key.**

• Press END if you do not want to save the setting.

6 **Press the END key several times to end the setting.**

*1.GDP:Graphic Display Pitch

Set the configurations with a computer

Set the configurations with a computer
Set the communication condition with the RS-232C interface.

1 **Select [INTERFACE] of the set up menu.**

(1) Press the FUNCTION key in LOCAL.
(2) Press ▲ ▼ to select [SET UP] and press the ENTER key.
(3) Press ▲ ▼ to select [INTERFACE].
(4) Press the ENTER key.

2 **Press the jog key ▲ or ▼ to select [RS-232C] .**

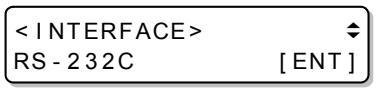

3 **Press the ENTER key.**

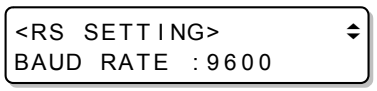

4 **Press the jog key ▲ or ▼ to select [BAUD RATE].**

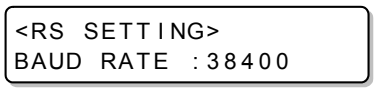

- Set values: 1200, 2400, 4800, 9600, 19200, 38400(bps)

Important!
- The recommended setting value is “38400(bps)”.
- Set the transfer speed of the host computer to CFL-605.

5 **Press the ENTER key.**

6 **Press the jog key ▲ or ▼ to select the following items.**

- The following items are provided for the setting of registration mark detection:
  Data bits, Parity / Stop bits / Handshake
- See pages P.3-33 for the contents of each setting item.

7 **Press the ENTER key.**

8 **Press the jog key ▲ or ▼ to select the set values.**

- See pages P.3-33 for the contents of each setting item.

9 Press the ENTER key to confirm the value.

10 When you want to terminate this procedure, press the END key twice.

Setting Items

Boud rate	1200, 2400, 4800, 9600, 19200, 38400(bps)
Data bits	7, 8(bit)
Parity	NON, EVEN, ODD
Stop bits	1, 2(bit)
Handshake	HARD, ENQACK, X-PRM, SOFT

Set the network

You can also perform network setting with “Network Configurator”, the tool to perform network setting of Mimaki’s product. To download the Network Configurator, check " Driver / Utility" on the download page at Mimaki Engineering (http://eng.mimaki.co.jp/download/).

1 **Select [INTERFACE] of the set up menu.**

(1) Press the FUNCTION key in LOCAL.
(2) Press ▲ ▼ to select [SET UP] and press the ENTER key.
(3) Press ▲ ▼ to select [INTERFACE].
(4) Press the ENTER key.

2 **Press the jog key ▲ or ▼ to select [NETWORK].**



3 **Press the ENTER key.**



4 **Press the ENTER key.**

• The IP address currently used by this machine is displayed.

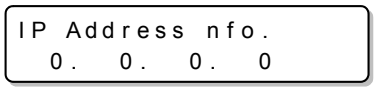



• After connecting with the network, it takes time until the IP address is determined. If the IP address has not been determined, “0.0.0.0” is displayed.

5 **Press the ENTER key.**



6 **Press the jog key ▲ or ▼ to select [MAC Address] .**



7 **Press the ENTER key.**

• The MAC address currently used by this machine is displayed.
• When you press ▶, the remaining address is displayed.

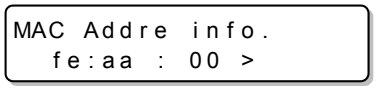

8 **Press the ENTER key.**



9 **Press the jog key ▲ or ▼ to select [DHCP] .**

<NETWORK>
DHCP : ON

10 **Press the ENTER key.**

- Press ▲ ▼ to set ON/ OFF.
- When it is ON, the IP address given by the DHCP server is used.

<NETWORK>
DHCP : ON

11 **Press the ENTER key.**

<NETWORK>
DHCP : ON

12 **Press the jog key ▲ or ▼ to select [AutoIP] .**

<NETWORK>
Auto IP : ON

13 **Press the ENTER key.**

- Press ▲ ▼ to set ON/ OFF.
- When it is ON, the IP address is determined by the AutoIP protocol. However, DHCP is ON, DHCP has priority.

<NETWORK>
Auto IP : ON

14 **Press the ENTER key.**

<NETWORK>
Auto IP : ON

15 **Press the jog key ▲ or ▼ to select the set values.**

- Both of DHCP and AutoIP is OFF, you can set IP Address/ Default Gateway/ DNS Address/ Sub Net Mask. For other than above, proceed to the Step 21.

16 **Press the ENTER key.**

17 **Press the jog key ▲ ▼ ◀ ▲ to select the set values.**

18 **Press the ENTER key to confirm the value.**

19 **Press the END key several times for terminating this function.**

- To reflect network settings, turn OFF the power once and turn ON again.

Setting event mail function

Set the function to send e-mails to the set e-mail address when events such as cutting start/ end and stop due to an error.
You can also perform network setting with “Network Configurator”, the tool to perform network setting of Mimaki’s product. To download the Network Configurator, check " Driver / Utility" on the download page at Mimaki Engineering (http://eng.mimaki.co.jp/download/).

Disclaimer
- The customer is responsible for the communication fee for Internet communication such as e-mail notification.
- The notification by the event mail function may not be delivered due to Internet environment, failure of the device/ the power supply, etc. Mimaki has absolutely no responsibility for any damages or loss resulting from non-delivery or delays.

Important!
- You can use event mail function by connecting LAN to this machine. Please prepare for LAN cable connection beforehand.
- Not compatible with SSL communication.

Enable the event mail function

1 **Select [INTERFACE] of the set up menu.**

(1) Press the FUNCTION key in LOCAL.
(2) Press ▲ ▼ to select [SET UP] and press the ENTER key.
(3) Press ▲ ▼ to select [INTERFACE].
(4) Press the ENTER key.

2 **Press the jog key ▲ or ▼ to select [EVENT MAIL] .**

<INTER FACE>
EVENT MAIL [ENT]

3 **Press the ENTER key.**

<EVENT MAIL>
Delivery [ENT]

4 **Press the ENTER key.**

Delivery
:OFF

5 **Press the jog key ▲ or ▼ to select “ON”**

Delivery
:ON

6 **Press the ENTER key.**

<EVENT MAIL>
Delivery [ENT]

7 **Press the END key several times for terminating this function.**

Set the event to send an event mail

1 **Select [INTERFACE] of the set up menu.**

(1) Press the FUNCTION key in LOCAL.
(2) Press ▲ ▼ to select [SET UP] and press the ENTER key.
(3) Press ▲ ▼ to select [INTERFACE].
(4) Press the ENTER key.

2 **Press the jog key ▲ or ▼ to select [EVENT MAIL] .**



3 **Press the ENTER key.**



4 **Press the jog key ▲ or ▼ to select [Event] .**

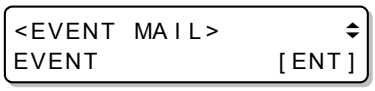

5 **Press the ENTER key.**

- Set whether you send/ do not send the e-mail at the start of plotting.
- Press ▲ ▼ to set ON/ OFF.



6 **Press the ENTER key.**

- Set whether you send/ do not send the e-mail at the end of plotting.
- Press ▲ ▼ to set ON/ OFF.



7 **Press the ENTER key.**

- Set whether you send/ do not send the e-mail when an error occurs.
- Press ▲ ▼ to set ON/ OFF.

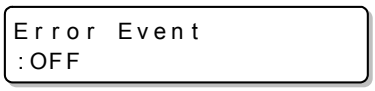

8 **Press the ENTER key.**

- Set whether you send/ do not send the e-mail when a warning occurs.
- Press ▲ ▼ to set ON/ OFF.



9 **Press the ENTER key.**

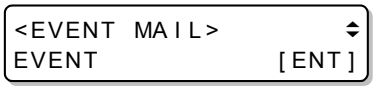

10 **Press the END key several times for terminating this function.**

Set the e-mail address

1 **Select [INTERFACE] of the set up menu.**

(1) Press the FUNCTION key in LOCAL.
(2) Press ▲ ▼ to select [SET UP] and press the ENTER key.
(3) Press ▲ ▼ to select [INTERFACE].
(4) Press the ENTER key.

2 **Press the jog key ▲ or ▼ to select [EVENT MAIL] .**



3 **Press the ENTER key.**

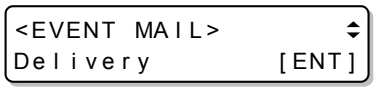

4 **Press the jog key ▲ or ▼ to select [Mail Addr.] .**

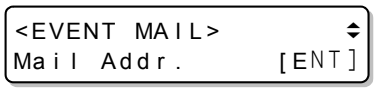

5 **Press the ENTER key.**



6 **Press the jog key ▲ ▼ ◀ ▶ to set mail address.**

- Set the e-mail address to which you send the event mail.
- Set it with alphanumeric characters and symbols within 96 characters.

7 **Press the ENTER key.**

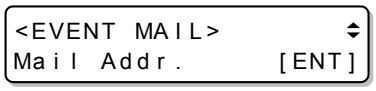

8 **Press the END key several times for terminating this function.**

Set the subject

1 **Select [INTERFACE] of the set up menu.**

(1) Press the FUNCTION key in LOCAL.
(2) Press ▲ ▼ to select [SET UP] and press the ENTER key.
(3) Press ▲ ▼ to select [INTERFACE].
(4) Press the ENTER key.

2 **Press the jog key ▲ or ▼ to select [EVENT MAIL].**



3 **Press the ENTER key.**

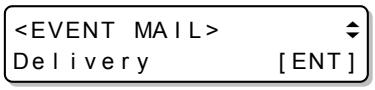

4 **Press the jog key ▲ or ▼ to select [Subject] .**

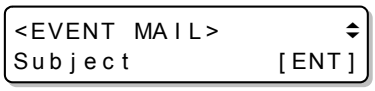

5 **Press the ENTER key.**

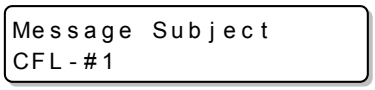

6 **Press the jog key ▲ ▼ ◀ ▶ to set subject**

- Set the characters to write in the subject of the event mail.
- Set it with alphanumeric characters and symbols within 8 characters.

7 **Press the ENTER key.**

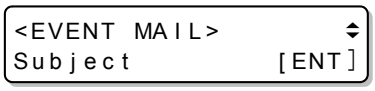

8 **Press the END key several times for terminating this function.**

Set the server

1 **Select [INTERFACE] of the set up menu.**

(1) Press the FUNCTION key in LOCAL.
(2) Press ▲ ▼ to select [SET UP] and press the ENTER key.
(3) Press ▲ ▼ to select [INTERFACE].
(4) Press the ENTER key.

2 **Press the jog key ▲ or ▼ to select [EVENT MAIL] .**



3 **Press the ENTER key.**

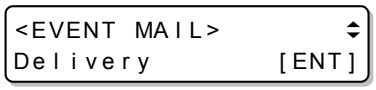

4 **Press the jog key ▲ or ▼ to select [SERVER] .**

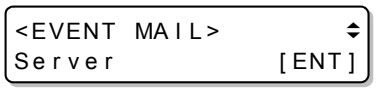

5 **Press the ENTER key.**



6 **Press the ENTER key.**

- Press the jog key ▲ ▼ ◀ ▶ to set SMTP server.
- Input the SMTP server name or IP address.



7 **Press the ENTER key.**



8 **Press the jog key ▲ or ▼ to select [SMTP PORT] .**



9 **Press the ENTER key.**

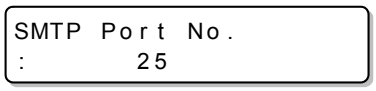

10 **Press the jog key ▲ or ▼ to set [Auth.] .**

11 **Press the ENTER key.**



12 **Press the jog key ▲ or ▼ to select [Sender Adr].**

```
SERVER SETUP      ⇕
SENDER Assr.   [ENT]
```

13 **Press the ENTER key.**

```
Sender Mail Address.
```

- Press ▲ ▼ ◀ ▶ and set the e-mail address to be used as the sender mail address.
- Set it with alphanumeric characters and symbols within 64 characters.

- Depending on your server, if you do not set the e-mail address not supporting the account, sending/receiving e-mails may be unavailable.

14 **Press the ENTER key.**

```
SERVER SETUP      ⇕
SENDER Assr.   [ENT]
```

15 **Press the jog key ▲ or ▼ to select [Auth.] .**

```
SERVER SETUP      ⇕
Auth.          [ENT]
```

16 **Press the ENTER key.**

```
Authentication
:SMTP Auth.
```

17 **Press the jog key ▲ or ▼ to set [Auth.] .**

```
Authentication
:POP before SMTP
```

- Set the authentication method of the SMTP server.
- When you select [OFF], proceed to the Step 32.

18 **Press the ENTER key.**

```
SERVER SETUP      ⇕
Auth.          [ENT]
```

19 **Press the jog key ▲ or ▼ to select [User Name].**

```
SERVER SETUP      ⇕
User Name      [ENT]
```

20 **Press the ENTER key.**

```
SERVER SETUP
User Name      [ENT]
```

- Press ▲ ▼ ◀ ▶ to set the user name to use for the authentication.
- Set it with alphanumeric characters and symbols within 30 characters.

21 **Press the ENTER key.**

```
SERVER SETUP      ⇕
Pass Word      [ENT]
```

22 **Press the jog key ▲ or ▼ to select [Pass Word] .**

```
SERVER SETUP      ⇕
Pass Word      [ENT]
```

23 **Press the ENTER key.**

Pass Word
****

- Press ▲ ▼ ◀ ▶ to set the password to use for the authentication.
- Set it with alphanumeric characters and symbols within 15 characters.

- On the password setting screen, the value currently set is not displayed. Only you can do is to enter the value newly.

24 **Press the ENTER key.**

SERVER SETUP ⇕
User Name [ENT]

- When you select [POP before SMTP] in the Step 17, set the items in the Step 27 to 31.

25 **Press the jog key ▲ or ▼ to select [POP3 Addr.] .**

SERVER SETUP ⇕
POP3 Addr. [ENT]

26 **Press the ENTER key.**

POP3 Address

- Press the jog key ▲ ▼ ◀ ▶ to set POP server.
- Set the server name or the IP address.

27 **Press the ENTER key.**

SERVER SETUP ⇕
POP3 Addr. [ENT]

28 **Press the jog key ▲ or ▼ to select [APOP] .**

SERVER SETUP ⇕
APOP [ENT]

29 **Press the ENTER key.**

APOP
:OFF

- Press ▲ ▼ to set ON/ OFF of APOP.

30 **Press the ENTER key.**

31 **Press the END key several times for terminating this function.**

Send a test e-mail

1 **Select [INTERFACE] of the set up menu.**

(1) Press the FUNCTION key in LOCAL.
(2) Press ▲ ▼ to select [SET UP] and press the ENTER key.
(3) Press ▲ ▼ to select [INTERFACE].
(4) Press the ENTER key.

2 **Press the jog key ▲ or ▼ to select [EVENT MAIL] .**



3 **Press the ENTER key.**

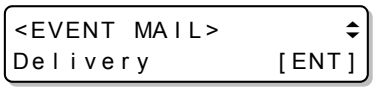

4 **Press the jog key ▲ or ▼ to select [Test] .**

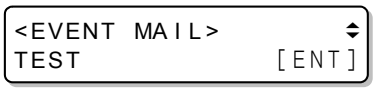

5 **Press the ENTER key.**



6 **Press the ENTER key.**

- The sent result is displayed.
- If sending test e-mail has failed, an error code is displayed. Refer to the next page to solve the problem.



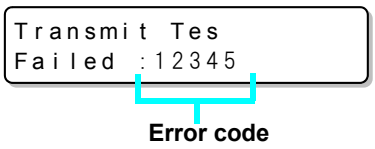

7 **Press the END key several times for terminating this function.**

Important!

- The sent result of the test e-mail is the result of e-mail sending process performed by this machine to the e-mail server. It does not indicate that the e-mail was received at the address.
- If the spam e-mail filter etc. has been set in the terminal in which e-mails are received, even if “Sending has been completed” is displayed, the e-mail cannot be received in some cases.
- If sending test e-mail has failed, the error below is displayed.
- If the error cannot be solved, try again after a while.
- For the server setting etc., contact with the network administrator or the provider.

Error Code	Error contents	Remedy
10	Network connection error	• Check that the machine is connected with the network. • Check that the machine IP address is correct. • Check that the machine is in the environment where DNS is available.
20	No valid e-mail address.	• Enter the correct e-mail address.
11003 **11004**	The POP server cannot be found. Or cannot access DNS server.	• Check the POP server address. • Check that the machine is in the environment where DNS is available.
11021	Cannot connect with the POP server.	• Check the POP server setting. • Check the firewall setting.
12010	An error returns from the POP server.	• Check the POP server setting.
13000	The POP authentication has failed.	• Check the user name and the password. • Check the APOP setting.
10013 **10014**	The SMTP server cannot be found. Or cannot access DNS server.	• Check the SMTP server address. • Check that the machine is in the environment where DNS is available.
10021	Cannot connect with the SMTP server.	• Check the SMTP server setting. • Check the SMTP port number. • Check the firewall setting.
10*** **11***** **20***** **21*****	An error returns from the SMTP server. Or, there was no response.	• Check the SMTP server setting. • Cannot communicate with a server that requires mandatory SSL communication. • Check protocol filter settings.
12***	It is invalid sender address.	• Check that the e-mail address supporting the account entered in the user name/ the password is set in “Sender mail Adr.”.
13***	The e-mail address cannot be found. Or, it is invalid sender address.	• Check the e-mail address. • Even if there is a mistake in the e-mail address, this error cannot be detected in some cases. • Check that the e-mail address supporting the account entered in the user name/ the password is set in “Sender mail Adr.”.
22008	SMTP authentication error	• The authentication method is not supported.
23*** **24***** **25*****	The SMTP authentication has failed.	• Check the user name and the password.

“***” is the error code returned from the e-mail server.

Copy the set value from the other user setting

1 **Press the FUNCTION key in the local mode.**

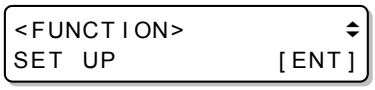

2 **Press the jog key ▲ or ▼ to select [SET UP] .**

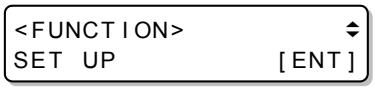

3 **Press the ENTER key.**



4 **Press the jog key ▲ or ▼ to select [CONFIG COPY].**



5 **Press the ENTER key.**



6 **Press the jog key ▲ or ▼, and choose the parameter you wish to copy**

- Set values: CONFIG, CUT COND, MULTI PASS



7 **Press the ENTER key.**

8 **Press the jog key ▲ or ▼ to select the user setting number to copy.**

- Set values: 1 to 4, Temp.



9 **Press the ENTER key.**

- From the selected user, copy the settings that you selected in step 4.

10 **Press the END key two times for terminating this reset operation.**

Reset the setting values to the initial state.

1 **Press the FUNCTION key in the local mode.**

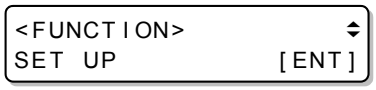

2 **Press the jog key ▲ or ▼ to select [SET UP] .**

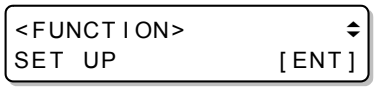

3 **Press the ENTER key.**



4 **Press the jog key ▲ or ▼ to select [SETUP RESET].**



5 **Press the ENTER key.**

- This is to initialize the setting items and parameters.
- Initialized items: “SET UP”, “MULTI PASS”, and “CUT CONDITION”



6 **Press the END key three times to stop and end initialization.**

Important!

- Initialize the current user setting. Other user settings are not initialized.

Switch the User

You can save the setting value (cutting condition and main body setting) by five users from the User 1 to 4, Temp. user.
By changing the user number depending on the user, you can change the environment without resetting these parameters.

Important!

- You cannot change the user while the cutting operation stops. First, clear data and then change the user.
- Temp. user does not save the settings.
  Please use if you do not want to change the existing settings such as a temporary test cut.
- Setting of Temp. user is initialized when the power is turned on again.
- If copy the settings of other users, execute the “Copy the set value from the other user setting (☞ P.3-45)”.

1 **Press the FUNCTION key in the local mode.**

<FUNCTION>
SET UP [ENT]

2 **Press the jog key ▲ or ▼ to select [USER CHANGE] .**

<FUNCTION>
CHANGE USER [ENT]

3 **Press the ENTER key.**

<USER CHANGE>
SELECT USER:1

4 **Press the jog key ▲ or ▼ to select a user.**

- Set values: 1 to 4, Temp.

<USER CHANGE>
SELECT USER:3

5 **Press the ENTER key.**

6 **Press the END key twice for terminating this function.**

The information of this machine can be confirmed.
The following items can be confirmed as machine information.

Item	Description
MODEL	This displays the model name of the machine.
SERIAL No.	This displays the serial number of the machine.
IP Address	This displays the IP address of the machine.
F/W ver.	This displays the firmware version of the machine.
Command Ver.	This displays the command version of the machine.

Displaying the Information / IP address

7 **Press the FUNCTION key in LOCAL.**

<FUNCTION> ⇕
SET UP [ENT]

8 **Press ▲ ▼ to select [INFORMATION].**

<FUNCTION> ⇕
INFORMATION [ENT]

9 **Press the ENTER key.**

<INFORMATION> ⇕
MODEL :CFL-605RT

10 **Press ▲ ▼ to select the machine information to display.**

• Information on IP address and firmware version are confirmed by pressing ENTER key.

MODEL

Displays model name.

<INFORMATION> ⇕
MODEL :CFL-605RT

Serial No.

Displays serial number.

<INFORMATION> ⇕
SERIAL No.00000000

IP address

Displays IP address in use.

<INFORMATION> ⇕
IP Address [ENT]

ENTER

IP Address Info.
0. 0. 0. 0

F/W version

Displays firmware version.

<INFORMATION> ⇕
F/W Ver. [ENT]

ENTER

<F/W Ver.>
Ver. 1.00

▲ ▼

ENTER

<Command Ver.>
Ver. 1.00

Chapter 4
Register Mark Reading Functions



This Section....

... describes the basic operations, such as mounting tools and workpieces.

Precautions when Creating Data with Register Marks 4-2
- Size of Register Marks 4-2
- Permitted Arrangements of Register Marks and the Design 4-3
- Prohibited Drawing Areas around Register Marks 4-3
- Guide to Register Mark Separation and Register Mark Size 4-5
- Register Mark Colors 4-6
- Bleeding or Smudging of Register Marks .4-6

Setting Register Mark Detection..... 4-7
- Precautions Related to Register Mark Detection 4-7
- Setting Register Mark Detection 4-9

Detecting Register Marks 4-10
- Using the Light Pointer to Check the Workpiece Tilt 4-10
- Setting height of register mark 4-11
- Register Mark Detection Procedure 4-12

Continuous Cutting of Register Marks. 4-13

Confirm the following when failed in cutting correctly 4-14
- Alignment of MARK SENSOR 4-14
- Check the sensor for the registration mark detection 4-16
- Correct the light pointer position 4-19
- Setting of the back side cut offset 4-20

Several restrictions apply when creating data with register marks.
To get the best out of the register mark functions, carefully read the precautions below to gain the knowledge required when creating register marks.

- The register marks described here are used to detect the work orientation and the lengths of the X and Y axes. They are not crop marks.

Size of Register Marks

See "Guide to Register Mark Separation and Register Mark Size" (☞ P.4-5) for guidelines on a side length of register marks with respect to the data.

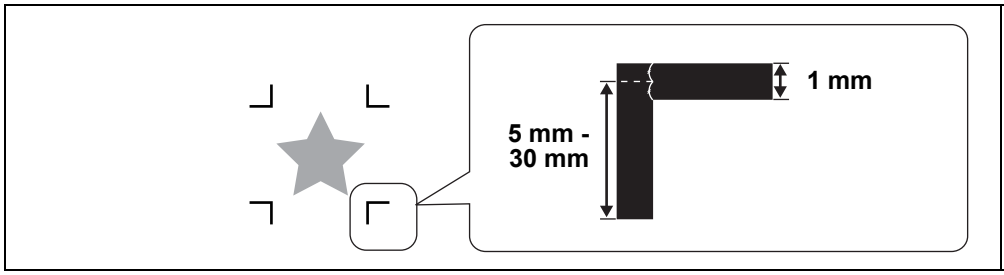

- Set a side length of the register mark between 5 mm and 30 mm.

Permitted Arrangements of Register Marks and the Design

Starting position of TP1 should be more than 10mm away from the end of workpiece and place within 10mm from maximum cutting area.
The possible range of design placement is 610x510mm at maximum.

- When place a register mark outside the cut area (the end of the workpiece), turn on the setting of MARK FILLUP. (☞ P.4-8)

Mark Form : Type 1	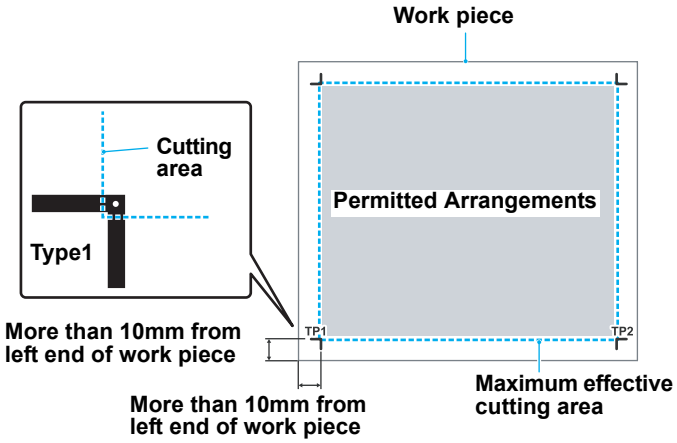
Mark Form : Type 2	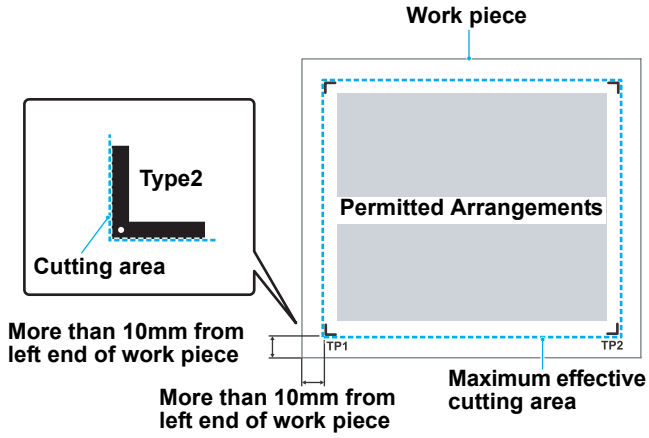

Prohibited Drawing Areas around Register Marks

Ensure that the areas around the register marks (area equivalent to the register mark size from the register mark origin) remain free of data and dirt. Otherwise, false detection or incorrect reading of the register marks may occur.

- False detection of the register marks causes displacement of the cutting position.

Mark Form : Type 1

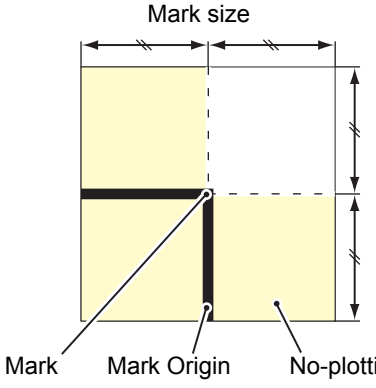

Mark Form : Type 2

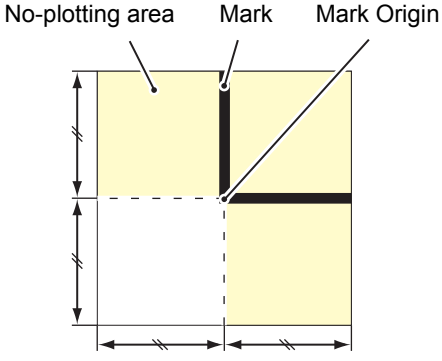

False Detection of Register Marks - Example 1

Plate displacement during offset printing

- Color printing by offset printing requires the output of CMYK plates.
  A slight displacement between these plates also causes a displacement of the printed register marks.
- Register mark detection on the print with plate displacement results in displacement of the register mark origin and therefore of the cutting position.

- Therefore, when using offset printing, print the register marks on only one of the four CMYK plates (such as printing register marks as K100%). Printing the register marks on one plate only eliminates concerns about plate displacement.
- Determine an easily detected register mark color by considering the color of the printed workpiece. (☞ P.4-6 "Register Mark Colors")

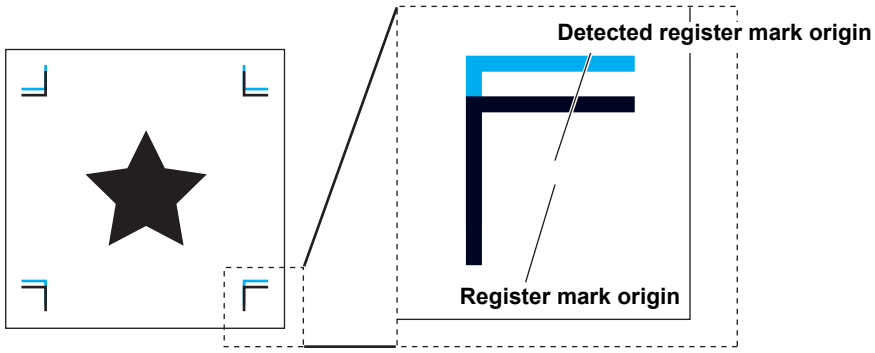

False Detection of Register Marks - Example 2

Square register marks (TP3 of Pattern A and TP1 of Pattern C; TP2 of Pattern A and TP1 of Pattern B) are not separated by at least 10 mm.

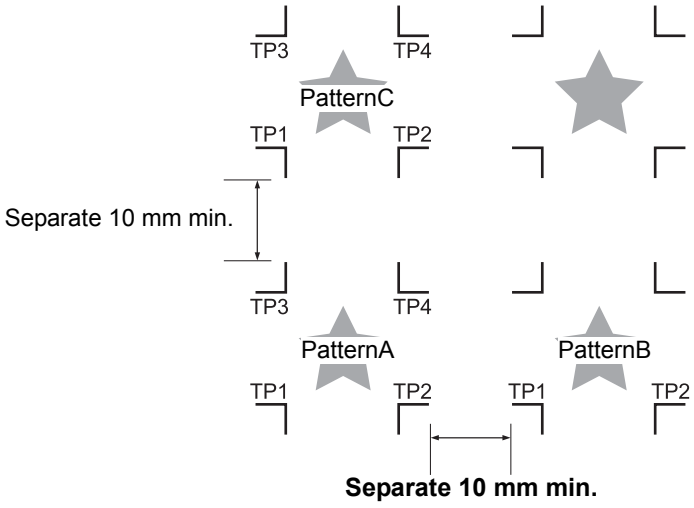

False Detection of Register Marks - Example 3

Register mark separation (TP2 to TP1; TP4 to TP2) does not exceed the register mark length.

● For sType1 register marks

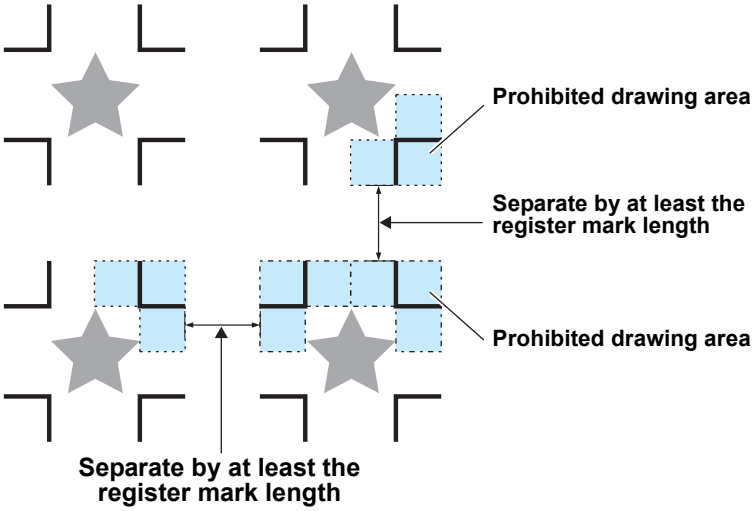

Guide to Register Mark Separation and Register Mark Size

The chart below shows a guide to the register mark separation (A) and register mark size (B).
The register marks may not be detected correctly if the register mark size (B) is too small with respect to the register mark separation (A). Create register marks of an appropriate size.

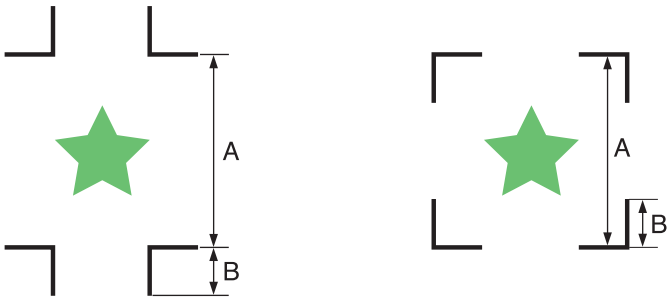

A	200 mm max.	500 mm
B	10 mm	15 mm

Register Mark Colors

The mark must be printed in black against the white background.
The registration mark will not be detected correctly if the background is not white or the mark is not black.

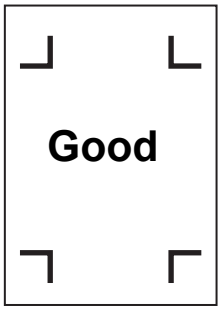



Bleeding or Smudging of Register Marks

If the mark is blurred, a wrong mark origin can be detected, thus resulting in deviated cutting.



Register mark (Normal)



Register mark (There is bleeding)

Precautions Related to Register Mark Detection

- To set the distance between the printed register marks the same as the cut distance, enter the distance between the printed register marks used for register mark detection. (☞ P.4-12)
- When register marks are detected, the origin is set at TP1. When the origin is moved to another position using the jog keys, the new origin is enabled.
- Rotation is disabled.
- To detect the register mark with FineCut, select “LOWRIGHT” in the command origin setting. (☞ P.1-22)

Table of Settings

Make the following settings to make cuts using register marks.

Set Item	Set value	Description
DETECT	OFF	Set for cutting normal workpieces, not for outline cutting.
	1 pt	Detects TP1 and sets the origin.
	2 pt X	Detects the two registration marks TP1 and TP2. Performs the skew compensation and the scale compensation in the X-direction.
	2 pt Y	Detects the two registration marks TP1 and TP3. Performs the skew correction and the scale compensation in the Y-direction.
	3 pt	Detects TP1, TP2, and TP3. Conducts tilt correction and scale correction in the X-direction and Y-direction.
	4 pt	Detects TP1, TP2, TP3, and TP4. Conducts tilt correction and 4-point scale correction.
SCALE	OFF *1	No scale correction during register mark detection.
	after	Enter the X and Y sizes in the data after register mark detection to correct the scale. SCALE is not conducted if DETECT is set to “1pt”.
	before	Enter the X and Y sizes in the data before register mark detection to correct the scale. SCALE is not conducted if DETECT is set to “1pt”.
SIZE	5 mm - 30 mm	Sets a side length of the register mark edge length. 
OFFSET-X **OFFSET-Y**	± 40.00mm	Generally the origin will be set at the position shown below. However, depending on your application and the work to be cut, the cutting position may be misaligned to the same direction. In this case, the location of the origin can be corrected. 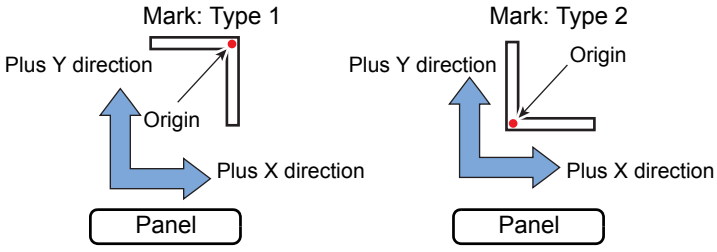 If the origin is located out of the available cutting area, “ERRC37 MARK ORG” will be displayed. In this case, write the registration marks in the area closer to the center of the sheet.

*1. Set to OFF when using FineCut.

Set Item	Set value	Description	
FORM	TYPE1 ⌟⌞ TYPE2 ⌜⌝	Select from three register mark styles: **TYPE1** TP3 TP4 TP1 TP2 Panel **TYPE2** TP3 TP4 TP1 TP2 Panel	
COPIES X (->) **COPIES Y (↑)**	1 to 99	Effective when the same pattern is multi-printed at regular intervals. Cuts automatically the preset number of sheets while detecting registration marks consecutively based on the first data. 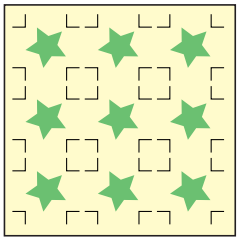 When the number of copies can be set on the application software, like on the supplied FineCut, set the value to [1].	
SENSOR LEVEL	1 to 7	The bigger the numerical value is, the higher the sensitivity of the registration mark sensor becomes. If it detects the registration mark by mistake, lower the sensitivity. Generally, use it with the setting value of “4”.	
MARK FILLUP	ON, OFF	Specify the setting as “ON” when using the “Fill around the register mark” function of FineCut to detect the printed registration mark. Create using a registration mark size of 10 mm or more when filling in around the registration mark.	
Backside Data Cut	CUT TOOL	REC.CUTTER1, 2 θ Cutter SWIVEL	When performing the backside cut, set the cut condition of tool to cut the frame (speed, pressure, offset, etc.). It becomes ther set value of each tool of plotter side. Use the function of FineCut, "Cutting from the reverse side."
	CUT FFSET	0.0 ~ 50.0mm	When performing the backside cut, set the place to cut the frame. Use the function of FineCut "Cutting from the reverse side ".

Setting Register Mark Detection

1 **Press the FUNCTION key in the local mode.**

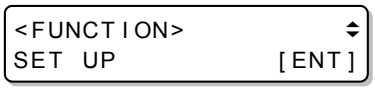

2 **Press the jog key ▲ or ▼ to select [SET UP] .**

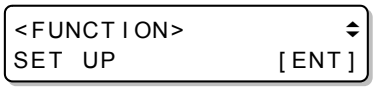

3 **Press the ENTER key.**



4 **Press the jog key ▲▼ to select [MARL DETECT] .**



5 **Press the ENTER key.**



6 **Press the jog key ▲ or ▼ to select [Number of detected registration marks].**

- Set values: OFF, 1pt, 2pt-X, 2pt-Y, 3pt, and 4pt



7 **Press the ENTER key.**



8 **Press the jog key ▲ or ▼ to select the following items.**

- The following items are provided for the setting of registration mark detection: SCALE, SIZE, OFFSET-X, OFFSET-Y, FORM, COPIES X, COPIES Y, DETECT MODE, SENSOR LEVEL, MARK FILLUP and Backside Data Cut
- See pages P.4-7 through P.4-8 for the contents of each setting item.

9 **Press the ENTER key.**

10 **Press the jog key ▲ or ▼ to select the set values.**

- See pages P.4-7 through P.4-8 for the contents of each setting item.

11 **Press the ENTER key to confirm the value.**

12 **When you want to terminate this procedure, press the END key twice.**

Detecting Register Marks

The unit can automatically detect register marks printed on the workpiece to cut round outlines of designs printed on the workpiece.

Important!

- If the workpiece has curled, flatten it out.
- If using cutting software that does not offer register mark functions, ensure that the areas between TP1 and TP3 and between TP1 and TP2 are free of images and dirt.

Using the Light Pointer to Check the Workpiece Tilt

When press REMOTE key in jog mode, the light pointer lights.
By pressing the jog keys to move the light pointer between points TP1 and TP2, the tilt of the workpiece can be checked from the light-pointer line. Adjust the tilt of the workpiece to this line.

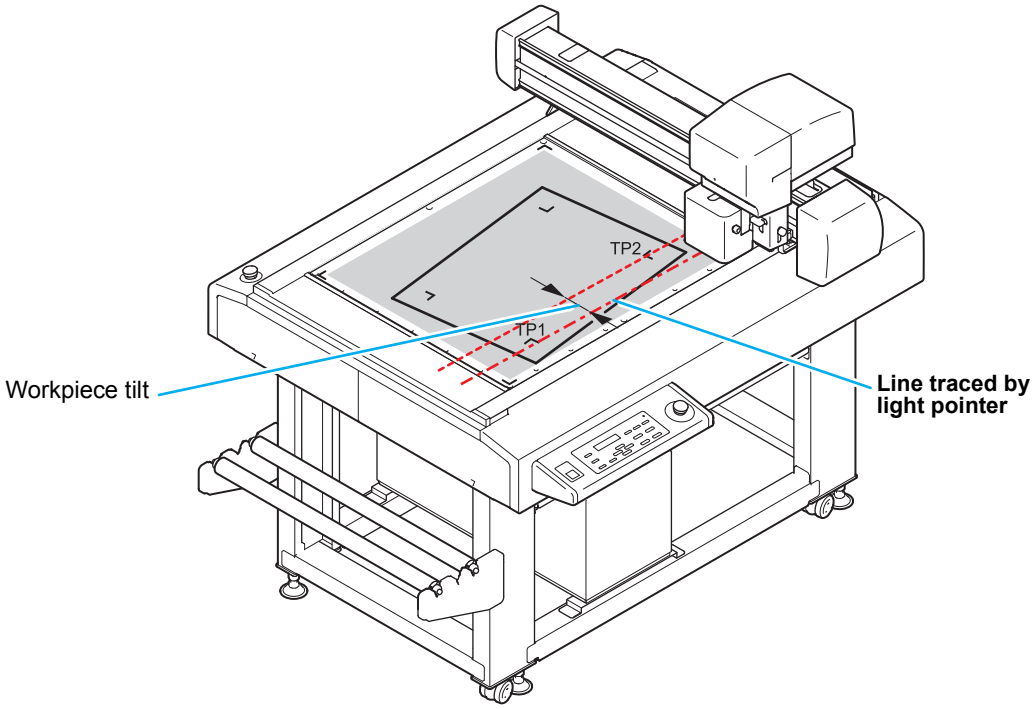

Setting height of register mark

Reading the register mark and set the height of the sensor.

Important!

- After cutting the data with mark sensor, lift up the mark sensor. When set a felt mat while lowering the mark sensor, the set guide plate may be hit by the head and may cause the head damage.

1 **Move the mark sensor on top of the register mark with the jog key.**

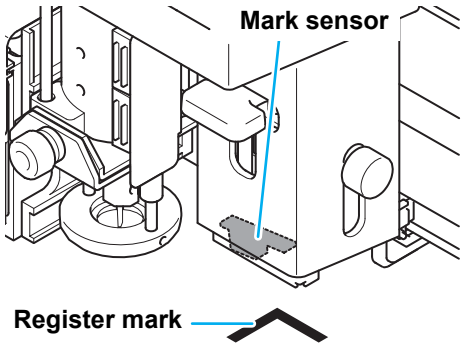

2 **Loosen the thumbscrew.**

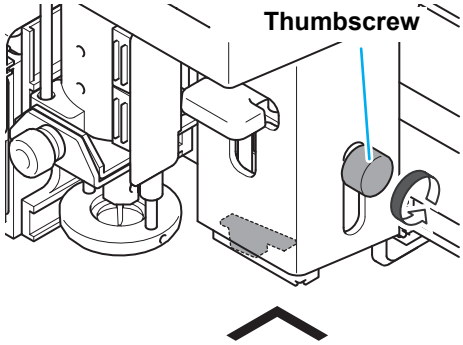

3 **Lower the lever to a height that the gauge shaft contacts the register mark.**

Important!

- Make sure that the height gauge shaft is in contact with the register mark.
- Use always lever for vertical movement of the mark sensor. If do with the thumbscrew, it will not be in the correct height.

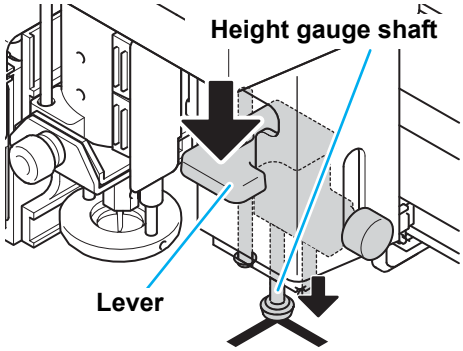

4 **Tighten the screw while the height guage shaft is in contact with the register mark and release the hand from the lever.**

- Until tighten the screws, hold it lowered the lever.
- When you release the hand, the lever goes up.

Important!

- Make sure that the lever is raised.
- Firmly fix thumbscrew.

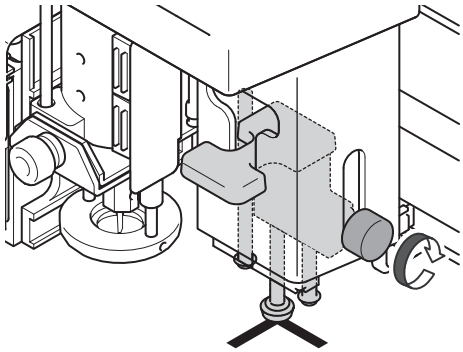

Register Mark Detection Procedure

1 Mount the workpiece.

2 Press END in local mode.

- The mark search mode is selected.

<MARK DETECT> mm
X : +0000.0 Y : +0000.0

3 Press the jog keys to accurately align the light pointer to the positions shown below.

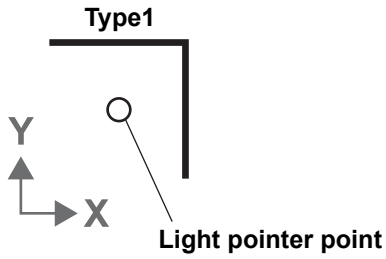

4 Press ENTER.

- Register mark detection starts.
- If SCALE is set to “BEFORE”, when ENTER is pressed, the screen shown at Step 5 appears before register mark detection starts.
- An error message appears if the register marks cannot be detected. Mount the workpiece again.

5 After the register marks are detected, the SCALE CORRECT screen appears. (This example shows 4-point detection.)

<MARK DETECT> mm
X (1 - 2) = * * * * . *

- If the data lengths and detected lengths differ, use ▲ ▼ to set them.

- If [SCALE] is set to OFF, the <SCALE SET> screen is not displayed.
- If [MARK DETECT] its set to [2pt−X], the display for inputting the Y length will not appear.
- If [DETECT] is set to “1pt” the <SCALE SET> screen is not displayed.

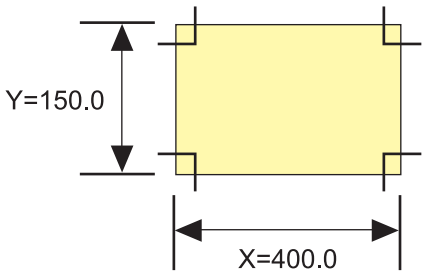

6 Press ENTER after setting.

- The local mode is selected.
- If SCALE is set to “before”, register mark detection starts.
- Press END to disable the scale correction.

Continuous Cutting of Register Marks

The FineCut cutting software permits continuous cutting of workpieces with only one set of register mark data printed.

Important!

- Select “multi mode” when cutting plural images printed on one media.
- When data remains in the receive buffer, the remaining data will also be cut. Be sure to carry out the Data Clear operation before performing continuous cutting.
  ☞ P.2-26"Interrupting Processing (Data Clear)"

1 Make the FineCut settings and start plotting.

(1) Select the single mode.
(2) Set the number of continuous cuts.
(3) Select the number of register marks to detect.
• For details, see the FineCut Operation Manual.

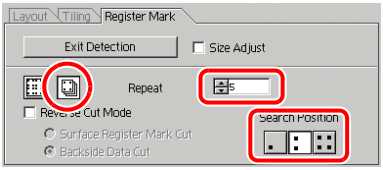

2 When cutting of the first workpiece is complete, replace the workpiece and press VACUUM .

• Press END to cancel continuous cutting.

<REMOTE>
SHEET EXCHANGE

3 Detect the register marks. (☞P.4-10)

• Copying starts when register mark detection is complete.
• Repeat Step 2 and Step 3 for the designated number of cuts.

<MARK DETECT> mm
X:+0000.0 Y:+0000.0

<MARK DETECT> mm
X(1-2)=****.*

4 When the designated number of workpieces has been cut and the system reverts to remote mode.

• Head withdrawal follows the setting of [AFTER PLOT] - [AUTO VIEW]. (☞ P.1-24)

<LOCAL>
A:SWIVEL

Alignment of MARK SENSOR

The offset value of the cutter and the mark sensor can be adjusted.
Set the sheet on which the register mark is printed.

1 **Install a cutter in the tool holder.**

2 **Confirm that the plotter is in the local mode.**

<LOCAL>
A:SWIVEL

3 **Press the FUNCTION key.**

<LOCAL>
SET UP [ENT]

4 **Select [MARK SENSOR] by pressing the jog key ▲ or ▼ .**

<FUNCTION>
MARK SENSOR [ENT]

5 **Press the ENTER key.**

<MARK SENSOR>
SENSOR OFS [ENT]

6 **Select [SENSOR OFS] by pressing the jog key ▲ or ▼ .**

<MARK SENSOR>
SENSOR OFS [ENT]

7 **Press the ENTER key.**

<SENSOR OFFSET>
X= 0.0mm Y= 0.0mm

- After detecting registration mark (1pt), cut the center line of the register mark and both sides of five auxiliary lines every 0.2 mm.

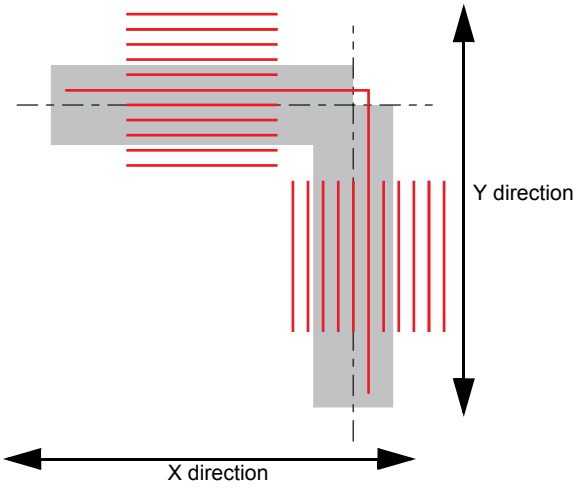

Misaligned by +0.2 mm from the center line of the register mark (– – –) in the X and the Y direction.

8 **Enter the corrected value (mm) by pressing the ▲▼ for the X direction, or the ▲▼ for the Y direction.**

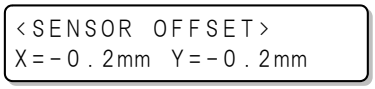

• If misaligned by +0.2 mm, enter "-0.2".

9 **Press the ENTER key.**

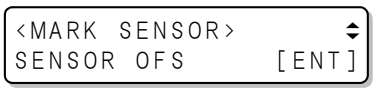

• Registering the compensation value.

10 **Press the END key twice for terminating this function.**

Important!

- The setting values are kept in memory even when the power is turned off.
- The sensor offset value selected by this operation is not initialized by SETUP RESET operation.
- Please make this adjustment when accidentally brought into contact with a set guide plate or thick media while lowering the mark sensor. (☞ P.4-11)

Check the sensor for the registration mark detection

Prepare the sheet on which the registration mark is printed.

Important!

- If you move the head and sheet manually, you cannot perform the right response check. Be sure to perform it via the following operations.
- For conditions of already printed registration mark, refer to “Precautions when Creating Data with Register Marks” (☞ P.4-2).
- Set the buzzer sound to “ON”. (☞ P.3-26) The registration mark detection sound is not made if the buzzer sound is set to OFF.

1 **Make sure that the plotter is in local mode.**

<LOCAL>
A:SWIVEL

2 **Enter the jog mode by pressing the jog key ▲ ▼ ◀ or ▶**

3 **Move the tip of the pen to the registration mark detection position by pressing the appropriate ones of the jog keys ▲ ▼ ◀ and ▶ .**

- Perform registration mark detection at a position 1mm or more away from the registration mark.

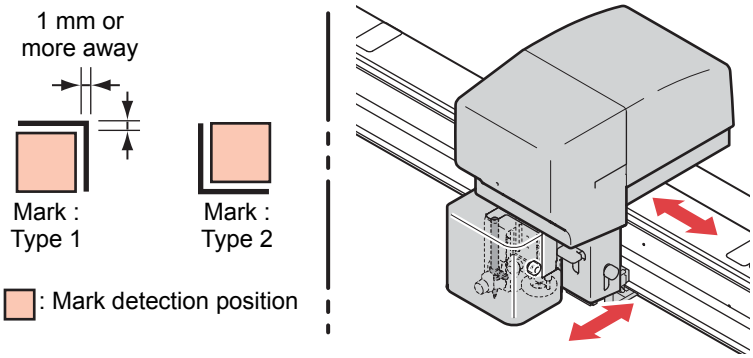

4 **Press the END key to terminate the jog mode.**

- The plotter returns to the local mode.

5 **Press the FUNCTION key.**

<FUNCTION>
SET UP [ENT]

6 **Select [MARK sensor] by pressing the jog key ▲ or ▼ .**

<FUNCTION>
MARK SENSOR [ENT]

7 **Press the ENTER key.**

<MARK SENSOR>
SENSOR OFS [ENT]

8 **Select [SENSOR CHECK] by pressing the jog key ▲ or ▼ .**

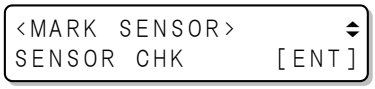

9 **Press the ENTER key.**

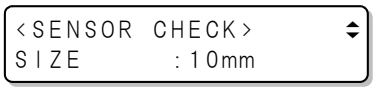

10 **Press the jog key ▲ or ▼ to select [SIZE], and ress the ENTER key.**

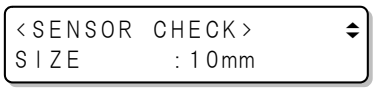

- Set the length of the register mark.
- For details on setting the [SIZE], refer to the [MARK DETECT] setting procedure. (☞ P.4-9)

11 **Press the jog key ▲ or ▼ to select [FORM].**



- Set the shape of the register mark.
- For details on setting the [FORM], refer to the [MARK DETECT] setting procedure. (☞ P.4-9)

12 **Perform registration mark detection with the jog key ENTER . (Next page)**

Detect operation

1 **Scan in the Y direction (plus direction) to detect the line.**

- The buzzer sounds when the line is detected. If the line is not detected, the buzzer does not sound.

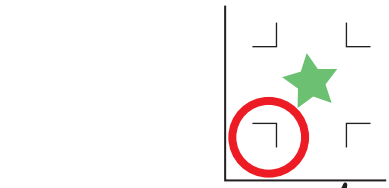

2 **Scan in the Y direction (minus direction) to detect the line.**

3 **Scan in the X direction (plus direction) to detect the line.**

4 **Scan in the X direction (minus direction) to detect the line.**

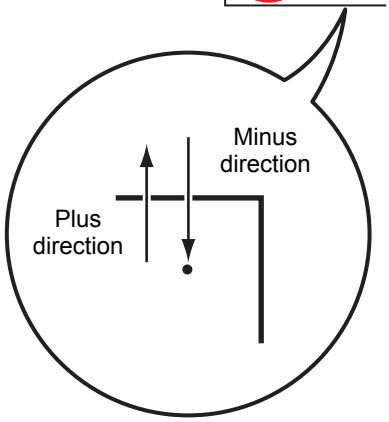

Scan in the Y direction

5 **Follow the Steps 1 to 4, and confirm if the buzzer sounds 4 times.**

- When the detection behavior completes successfully, the buzzer sounds 4 times.
- If the buzzer does not sound, contact our sales office after checking the registration mark condition.

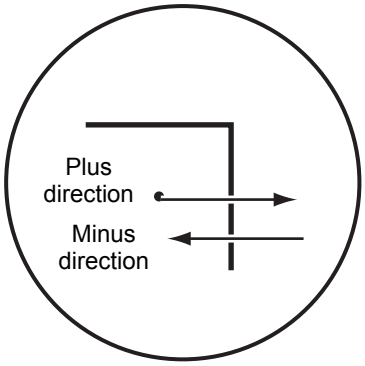

Scan in the Y direction

Correct the light pointer position

If the plotter fails to recognize any registration mark properly, the possible cause is an error in the positional relationship between the MARK sensor and the light pointer.
In this case, adjust the position of the light pointer.

1 **Install a cutter in the tool holder.**

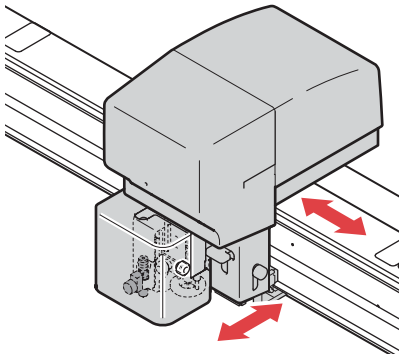

2 **Set the copy paper.**

3 **Confirm that the plotter is in the local mode.**

```
<LOCAL>
 A:SWIVEL
```

4 **Press the FUNCTION key.**

```
<FUNCTION>          ≎
SET UP          [ENT]
```

5 **Select [MARK SENSOR] by pressing the jog key ▲ or ▼.**

```
<FUNCTION>          ≎
MARK SENSOR     [ENT]
```

6 **Press the ENTER key.**

```
<MARK SENSOR>       ≎
SENSOR OFS      [ENT]
```

7 **Select [POINTER OFS] by pressing the jog key ▲ or ▼.**

```
<MARK SENSOR>       ≎
POINTER OFS     [ENT]
```

8 **Press the ENTER key.**

```
<LED POINTER>
A= 0.0 B= 0.0
```

- A 10 mm by 10 mm cross pattern will be cutted.
- The light pointer turns on and moves to the center of the cross pattern.

9 **By pressing the jog keys ▲ ▼ ◀ and ▶, adjust the light pointer position so that the center of the light pointer is in alignment with the center of the cross pattern.**

10 **Press the ENTER key.**

```
<MARK SENSOR>       ≎
POINTER OFS     [ENT]
```

- Registering the compensation value.

11 **Press the END key twice for terminating this function.**

Important!

- The value registered in the [POINTER OFS] is not initialized even by executing the [SETUP RESET].

Setting of the back side cut offset

When cut the surface with the back side cut, set the offset value of the outer frame of the register mark.

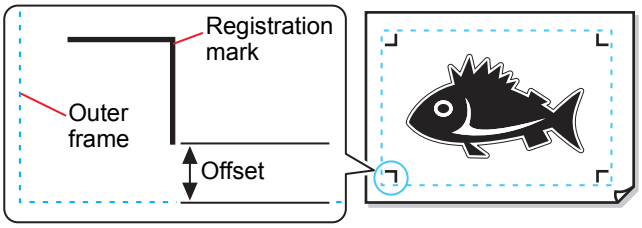

1 **Install a penin the tool holder.**

2 **Set the copy paper.**

- Butt the corner of the paper against the set guide plate.

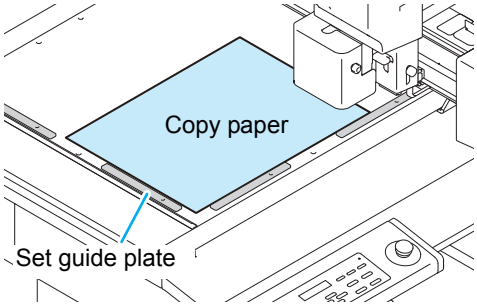

Important! • Please use the paper with the corner of 90 ° to strike.

3 **Confirm that the plotter is in the local mode.**

<LOCAL>
A:PEN

4 **Press the FUNCTION key.**

<FUNCTION>
SET UP [ENT]

5 **Select [MARK SENSOR] by pressing the jog key ▲ or ▼.**

<FUNCTION>
MARK SENSOR [ENT]

6 **Press the ENTER key.**

<MARK SENSOR>
SENSOR OFS [ENT]

7 **Select [BACKSIDECUT OFS] by pressing the jog key ▲ or ▼.**

<MARK SENSOR>
BACKSIDECUT OFS[ENT]

8 **Press the ENTER key.**

<BACKSIDECUT OFS>
DRAW PATTERN [ENT]

9 **Press the ENTER key.**

- Draw the pattern.

10 **Measure the distance from the set guide plate to the pattern**

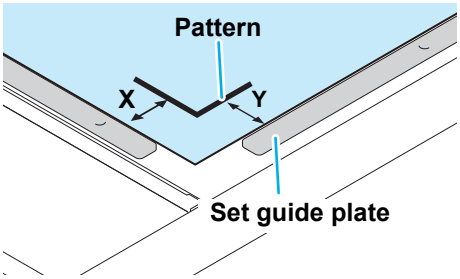

11 **Press the jog key (▲)(▼) to select A or B.**

<BACKSIDECUT OFS>
CUT OFFSE X:20.0mm

12 **Press the ENTER key.**

13 **Press (▲)(▼) to enter the value measured in step 10.**

<BACKSIDECUT OFS>
CUT OFFSE X:15.0mm

X(length) : 0 ~ 50.0mm
Y : 0 ~ 50.0mm

14 **Press ENTER key, and determine the adjustment value.**

<BACKSIDECUT OFS>
CUT OFFSE X:15.0mm

- When cancel the registration, press END key.
- Repeat Step 11 and later, and enter the value of X and Y.
- When quit, press END key in the display of step 11.

Important!

- Please strike exactly against the set guide plate.
- Please press the media against without gap to the set guide plate.
  When it is pressed against the set guide plate, please make sure the set guide plate is not floated.

Chapter 5
Daily Maintenance



This Section....

... describes how to maintain the unit and how to replace the head with an optional head.

Daily Maintenance 5-2
- Cutting Panel Surface 5-2
- Covers 5-2
- Care of the cutter blade 5-2
- Unit B 5-3
- Cleaning the Vacuum Filter 5-4
- Cleaning the Register Mark Sensor 5-5

Supplied items 5-6

Periodic cleaning is recommended to ensure continuous satisfactory use of the unit.



- Do not use an abrasive cleaner or thinners. These could deform the covers or cutting panel.

Cutting Panel Surface

Clean the air holes with a fine needle if they become blocked. The blocking foreign matter will be discharged from the vacuum outlet.
If the surface is lightly contaminated, wipe off the dirt with a clean, dry cloth. For more severe dirt, wipe off the dirt with a small amount of alcohol on a clean, dry cloth.

Covers

If the surface is lightly contaminated, wipe off the dirt with a clean, dry cloth. For more severe dirt, wipe off the dirt with a small amount of alcohol on a clean, dry cloth.

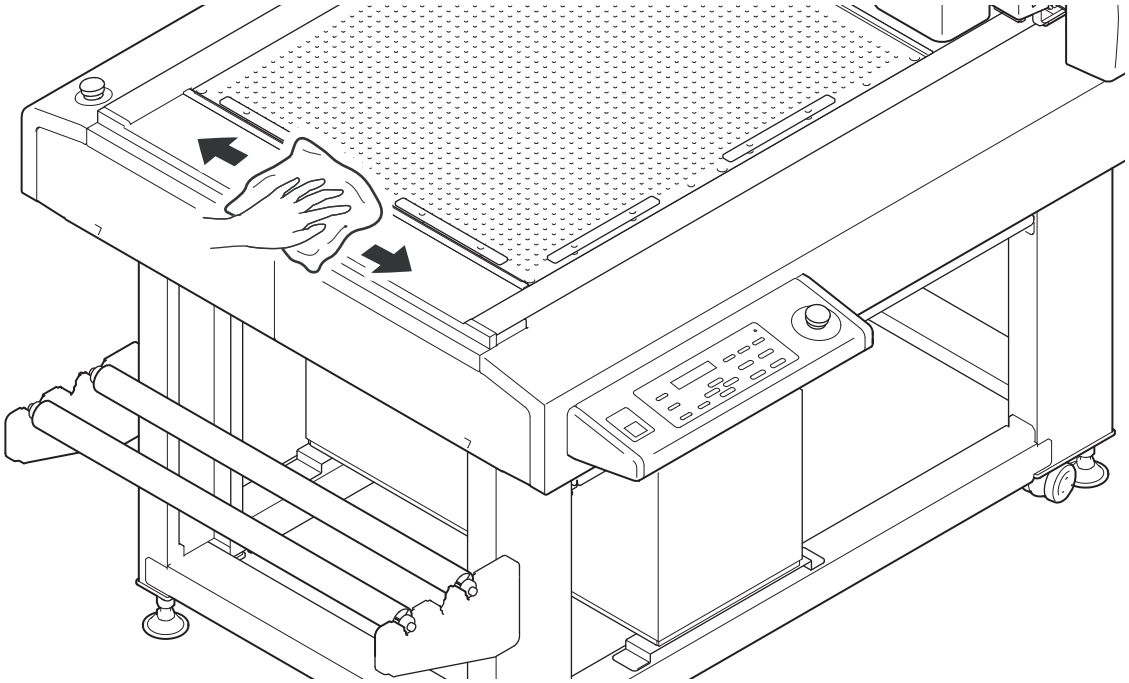

Care of the cutter blade

When you cut the tacky work, the blade gets glue and the sharpness of blade becomes dull.
Please wipe off with a commercially available cleaner, etc..



- When cleaning of the cutter blade, please do not touch the cutting edge with your fingers. This may cause injury.

Unit B

The reciprocating shaft may cease moving if lubrication is inadequate.

Before the work of the day, apply the grease to vibration axis.

Important!

- This work is done in the state of power supply OFF.
- Keep the tool removed.

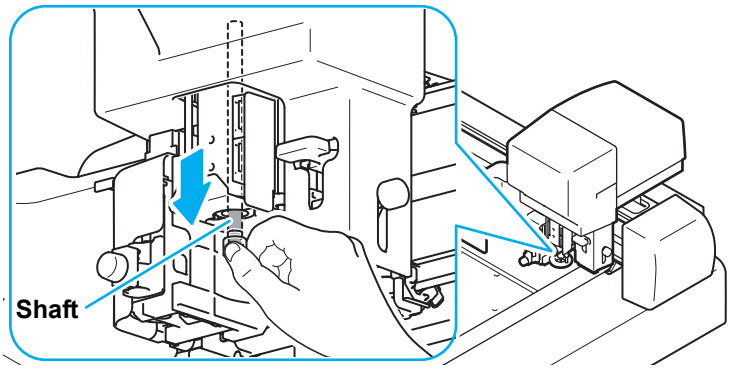

Tools necessary to lubrication	• Grease coating brush (Accessories)	• Waste
	• Grease (Accessories)	• Gloves

1 Draw the vibration axis.

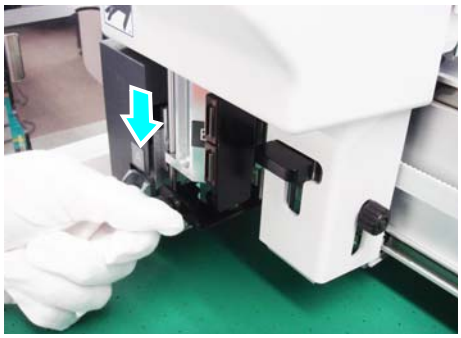

2 Wipe off the old grease adhering to the axis in the lint-free cloth

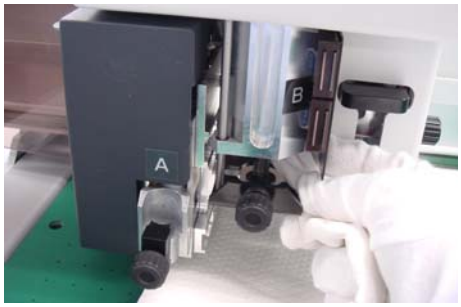

3 Apply grease to the vibration axis with the included brush.

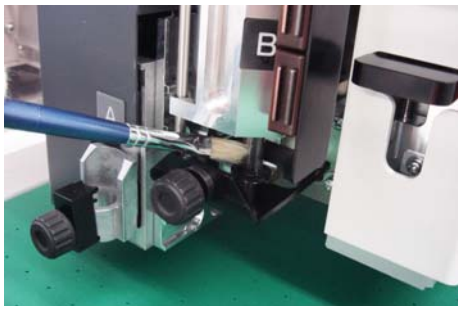

Important!

- Amount of grease to be applied is about 0.05g.



- If the application quantity of grease is too much or adheres to other than the oscillation axis, may cause splatters while working and risk of contaminating the work. Please wipe off the extra grease.

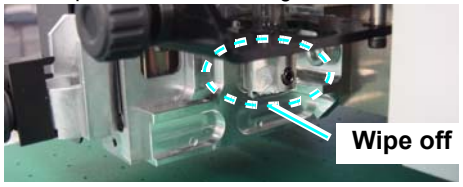

Cleaning the Vacuum Filter

The workpiece adhesion force will decrease if the filter becomes blocked in the vacuum.
Clean the filter periodically (about once a month).



- When clean the filter, please wear gloves. Handling the filter with bare hands may cause injury.

1 Remove the lid.

- Disengage the hooks and remove the lid.

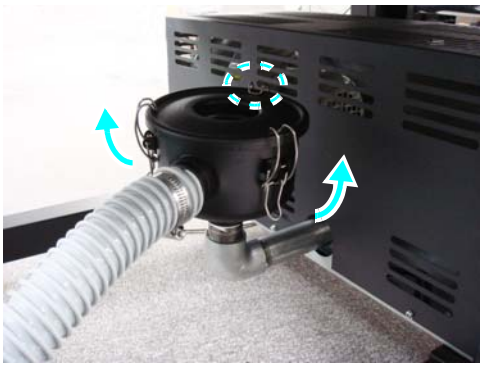

2 Remove the filter.



3 Use a vaccum cleaner to suck dust and dirt from the filter.

4 Put the filter back in its original position.

(1) Push in the filter and firmly close the lid.
- The hooks will not engage unless the lid is firmly closed.

(2) Engage the hooks.

Cleaning the Register Mark Sensor

Wipe dust generated during cutting off the register mark sensor with a clean, dry waste.

In addition, when Y bar rail is dirty, noise occurs.
After wiping off the dust with a dry lint-free cloth, take the attached grease to lint-free cloth and apply to the rail.

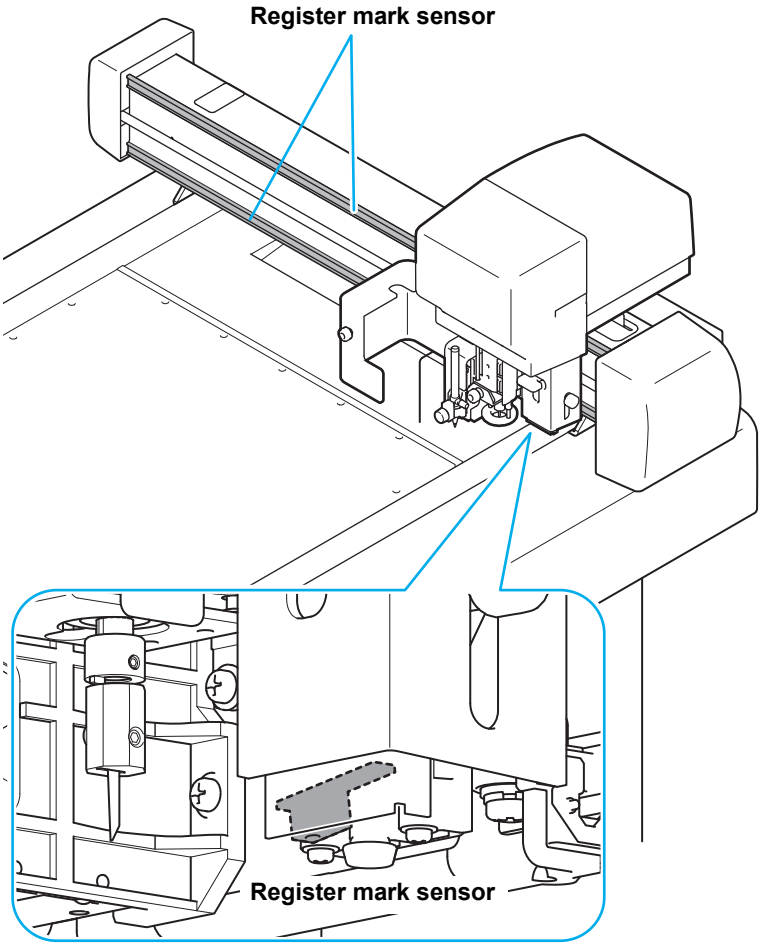

Supplied items

Purchase them in a distributor in your district or our office.

Supply items	Supplied items		
	Part Name	Part No.	Remarks
tial cutter	High-speed steel blade 30°	SPB-0043	Accessories
	Carbide blade 30°	SPB-0045	
Reciprocating cutter	Reciprocating cutter 2° x10	SPB-0086	
	Carbide blade 7 × 15	SPB-0075	
Eccentric cutter	Swivel Blade for PVC with low-pressure	SPB-0030	Accessories
	Swivel Blade for reflecting sheet	SPB-0006	
	Swivel Blade for fluorescent sheet	SPB-0007	
	Swivel Blade for PVC sheet	SPB-0001	
	Swivel Blade for small letters	SPB-0003	
	Swivel Blade C	SPB-0085	Accessories (Assembled in the holder)
Holder	Pen holder	SPA-0183	Accessories (One attached refill lead)
	Reciprocating cutter holder 07L	SPA-0260	Accessories
	Tangential cutter holder 2Nα	SPA-0261	Accessories
	Cutter holder	SPA-0001	
	Cutter holder	SPA-0090	Accessories
	Cutter holder C	SPA-0259	Accessories
	Creasing holder L	SPA-0262	Accessories
Other accessories and consumables	Felt mat 605	SPC-0785	
	Cutting mat 605	SPC-0786	
	Refill lead for ball point pen	SPC-0726	
	Creasing roller ϕ9	SPB-0087	Accessories
	Adsorption sheet	SPC-0787	Roll
	Grease	SPA-0163	Accessories
	Hard mat	SPC-0788	Accessories

Chapter 6
Troubleshooting



This Section....

describes what to do if you think the unit is broken and gives the appropriate remedies for each displayed error number.
It also describes the self-test functions.

Now What Do I Do? 6-2
Adjusting the Tools 6-3
- Adjusting the Cutter 6-3
- Circle θ Correction 6-11

Troubleshooting 6-14
- Unit does not operate when the power is turned ON 6-14
- Unit does not operate after the CAD data is sent 6-14
- An error occurs when the data is sent 6-14
- Tool lifts up the paper 6-15
- Drawn lines are broken or smudged 6-15
- No reciprocating movement 6-15

Problems Causing an Error Display 6-16
- Non-fatal Errors 6-16
- Status message 6-19

Sample Cut 6-20
- Perform SAMPLE CUT to Find out the Cause of Cutting Error. 6-21

CFL-605RT Specifications 6-23

Problem	Solution
Inadequate cutting • When the cutter descends, cutting is incomplete, although the blade protrudes by more than the workpiece thickness.	The workpiece can be reliably cut by increasing the pressure when the cutter descends. • Set or increase the pressure offset value that is added to the press value. ☞ P.2-10 "Select the tool condition"
Cutting incomplete at the start or end point (Reciprocating cutter) • Cutting is incomplete at the positions where the cutter descends or ascends.	Increase the start offset setting to move forward the position where the cutter descends. ☞ P.2-10 "Select the tool condition"
	Increase the end offset setting to move backward the position where the cutter ascends. ☞ P.2-10 "Select the tool condition"
Cutting incomplete at the start or end point (Swivel cutter)	Set the over cut. (☞ P.3-25)
Circle start and end points do not match • A circle start and end points can be displaced due to the workpiece thickness and hardness.	Use circle θ correction to correct for the displacement.
Grid lines torn along flutes of corrugate cardboard. • Tearing can occur if the press value in the cutting conditions is too high when grid cutting along the flutes of corrugated cardboard.	**(1)** Align the corrugated cardboard flutes in the Y-axis direction. **(2)** Set the Y press value in the cutting conditions. (☞ P.2-11)

Adjusting the Tools

Tool adjustment is required if the start and end points do not match when cutting (drawing) with the unit.
Tool adjustment is possible only when using Model R1 or Model TF2.

The following four tool adjustments are available:

(1) Cutter adjustment ..... Adjusts the cutter mounted in Head B or C.
(2) Roller adjustment ..... Adjusts a roller mounted in Head C.
(3) Circle θ correction ..... Adjustment if start and end points do not match when cutting (drawing) a circle.
(4) Light pointer adjustment ..... Adjustments when the register marks cannot be detected.

Adjusting the Cutter

Adjusts the cutter mounted in Head B or C.
The following adjustments are available to adjust the cutter.

- A roller can be adjusted in the same way.

❶ **Adjust Eccentricity** **P.6-4**	Make this adjustment after replacing the blade or the tool.	**Adjust Eccentricity Screen** <CENTER ADJUST> CENTER A: 0.00mm <CENTER ADJUST> CENTER B: 0.00mm
❷ **Adjust θ Angle** **P.6-9**	Adjusts the cutter and roller angle of rotation.	**Adjust θ Angle Screen** <θ ADJUST> θ: 0.00°
❸ **Adjust Offset** **P.6-7**	Adjusts for displacement between the cutter and tool positions.	**Adjust Offset Screen** <OFFSET ADJUST> OFFSET X: 0.00mm <OFFSET ADJUST> OFFSET Y: 0.00mm

- **For more efficient cutter adjustment, follow the sequence below:**

❸ ⇨ ❶ ⇨ ❷ ⇨ ❶ ⇨ ❷ ⇨ ❸

This sequence is one recommended example. Set in a sequence that will be convenient for you.

Adjusting Eccentricity

Adjust the eccentricity by checking the test pattern drawn by the cutter or roller.

- First, mount a pen in Unit A.

Test pattern drawn by the cutter

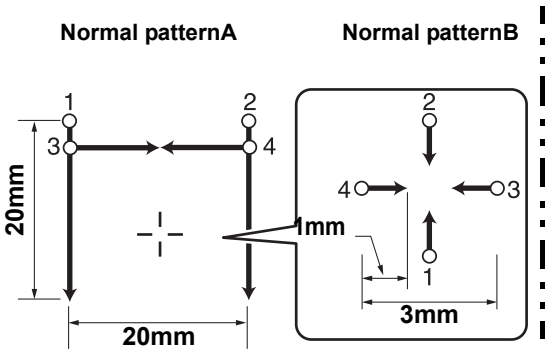

Test pattern drawn by the roller

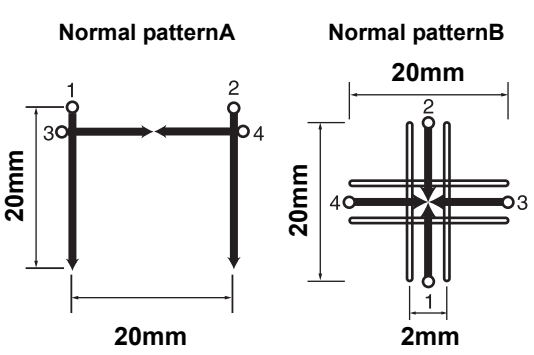

1 **Press the FUNCTION key in the local mode.**

```
<FUNCTION>
SET UP          [ENT]
```

2 **Press the jog key ▲ or ▼ to select [TOOL ADJUST] .**

```
<FUNCTION>
TOOL ADJUST     [ENT]
```

3 **Press the ENTER key.**

```
<TOOL SELTECT>
TOOL: B:REC.CUTTER1
```

4 **Press the jog key ▲▼ to select tool.**

- Set value: REC.CUTTER1~2, θCUTTER, ROLLER1~3

```
<TOOL SELTECT>
TOOL: B:REC.CUTTER1
```

5 **Press the ENTER key.**

```
<FUNCTION>
MARK DETECT     [ENT]
```

6 **Attach the selected tool (☞ P.2-22).**

7 **Press the jog key ▲▼ to select [CENTER ADJUST].**

```
<REC.CUTTER1 ADJ>
CENTER ADJUST   [ENT]
```

8 **Press the ENTER key.**

```
<CENTER ADJUST>
CENTER A: 0.00mm
```

9 **Press TEST key.**

<TEST PATTERN>
DRAW: [ENT] POS: [JOG]

10 **Press the jog keys to move the head to the drawing position.**

11 **Press ENTER to start drawing the test pattern.**

12 **Press END key to return to the selection of the adjustment value**

<CENTER ADJUST>
CENTER A: 0.00mm

13 **Press the jog key ▲▼ to select A or B.**

<CENTER ADJUST>
CENTER B: 0.00mm

14 **Press the ENTER key.**

15 **Adjust by pressing ▲▼.**

<CENTER ADJUST>
CENTER B: 1.00mm

A(LENGTH) : - 5 ~ + 5
Set values : - 5 ~ + 5

• For details, see P.6-6 “Adjusting Eccentricity”.

16 **Press ENTER key, and determine the adjustment value.**

<CENTER ADJUST>
CENTER A: 0.00mm

• When cancel the registration, press END key.
• When adjust the other pattern, press ▲▼ key to display the screen to adjust and repeat steps 12 and later.
• When quit, press END key in the display of step 12.

Adjusting the Eccentricity

The eccentricity can be adjusted on the screen below.

Adjusting Pattern A
Aligns the center of the cutter (roller) with the center of the holder.
Press ▲ or ▼ to adjust. (0.01 mm pitch)

<CENTER ADJUST>
CENTER A: 0.00mm

Adjusting Pattern B
Adjustment to check whether the tool is tilted.
Press ▲ or ▼ to adjust. (0.05 mm pitch)

<CENTER ADJUST>
CENTER B: 1.00mm

(1) Check the position of the horizontal line with respect to the vertical lines on Pattern A.
- Check if the horizontal line protrudes or if there are gaps.

(2) Check if the X and Y axis lines in Pattern B form straight lines.

(3) Make the adjustment.

Adjusting Pattern A	Adjusting Pattern B
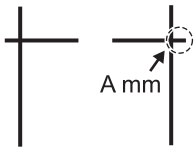 **Line protrudes** Measure distance A on the diagram. Press ▲ to adjust in the positive direction to Set value = -A. 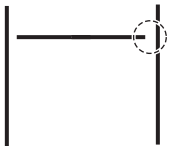 **Gap** Measure distance A on the diagram. Press ▼ to adjust in the negative direction to Set value = +A.	 **Top line displaced to the right** Press ▲ to adjust in the positive direction to Set value = (length B in diagram) / 2. 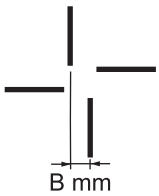 **Top line displaced to the left** Press ▼ to adjust in the negative direction to Set value = (length B in diagram) / 2.
• When using the 2°x10 carbide reciprocating cutter, adjust the horizontal line to protrude approx. 2 mm.	

Adjusting the Offsets

Conduct positioning to correct for displacements by comparing a test pattern drawn by the pen with a test pattern drawn by the cutter or roller.

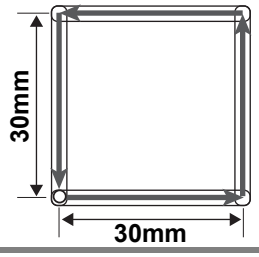

Normal test pattern

○ : Cutting start point
→ : Cutting direction
⬭ : Pen

- First, mount a pen in Unit A.

1 **Press the FUNCTION key in the local mode.**

```
<FUNCTION>
SET UP          [ENT]
```

2 **Press the jog key ▲ or ▼ to select [TOOL ADJUST] .**

```
<FUNCTION>
TOOL ADJUST     [ENT]
```

3 **Press the ENTER key.**

```
<TOOL SELTECT>
TOOL: B:REC.CUTTER1
```

4 **Press the jog key ▲▼ to select tool.**

- Set value: REC.CUTTER1~2, θCUTTER, ROLLER1~3

```
<TOOL SELTECT>
TOOL: B:REC.CUTTER1
```

5 **Press the ENTER key.**

```
<FUNCTION>
MARK DETECT     [ENT]
```

6 **Attach the selected tool (☞ P.2-22).**

7 **Press the jog key ▲▼ to select [OFFSET ADJUST].**

```
<REC.CUTTER1 ADJ>
OFFSET ADJUST   [ENT]
```

8 **Press the ENTER key.**

```
<OFFSET ADJUST>
OFFSET X: 0.00mm
```

9 **Press TEST key.**

```
<TEST PATTERN>
DRAW:[ENT] POS:[JOG]
```

10 **Press the jog keys to move the head to the drawing position.**

11 **Press ENTER to start drawing the test pattern.**

12 **Press END key to return to the selection of the adjustment value.**

```
<OFFSET ADJUST>
OFFSET X: 0.00mm
```

13 **Press the jog key (▲)(▼) to select X or Y.**

<OFFSET ADJUST>
OFFSET Y: 0.00mm

14 **Press the (ENTER) key.**

15 **Press (▲)(▼) to adjust.**

CUTTER X(ROLLER X): -20.0 ~ +20.0
CUTTER Y(ROLLER Y): -20.0 ~ +20.0

• For details, see P.6-8 “Adjusting the Offsets”.

<OFFSET ADJUST>
OFFSET Y: 1.00mm

16 **Press (ENTER) key to determine the adjustment value.**

<OFFSET ADJUST>
OFFSET X: 0.00mm

• When cancel the registration, press (END).
• When adjust the other pattern, press (▲)(▼) and display the screen to adjust and repeat steps 12 or later.
• When quit, press (END) in the display of step 12.

Adjusting the Offsets

The offsets can be adjusted on the screen below.

Adjusting Pattern X
Distance from pen to cutter (roller) with respect to the X axis.
Press (▲) or (▼) to adjust. (0.05 mm pitch)

<OFFSET ADJUST>
OFFSET X: 0.00mm

Adjusting Pattern Y
Adjustment to check whether the tool is tilted.
Press (▲) or (▼) to adjust. (0.05 mm pitch)

<OFFSET ADJUST>
OFFSET Y: 0.00mm

(1) Measure the displacement between the patterns drawn with the pen and cutter (roller).

(2) Make the adjustment.

Displaced horizontally from the operation panel	Displaced vertically from the operation panel
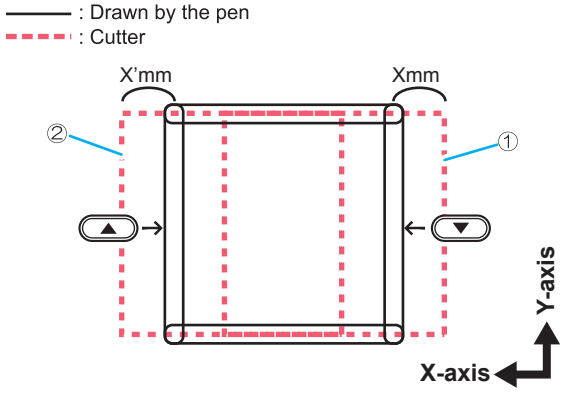	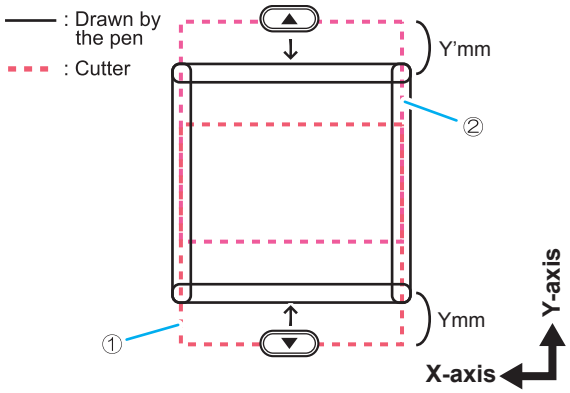
When a drawing by the cutter is displaced to the right (dotted line 1) Press (▲) to set the Set value = (Current indicated value) + (Y mm). **When a drawing by the cutter is displaced to the left (dotted line 2)** Press (▼) to set the Set value = (Current indicated value) - (Y' mm).	**When a drawing by the cutter is displaced downward (dotted line 1)** Press (▼) to set the Set value = (Current indicated value) + (X mm). **When a drawing by the cutter is displaced upward (dotted line 2)** Press (▲) to set the Set value = (Current indicated value) - (X' mm).

Adjusting the θ Angle

Adjust the angle of rotation by comparing a test pattern drawn by the pen with a test pattern drawn by the cutter or roller.

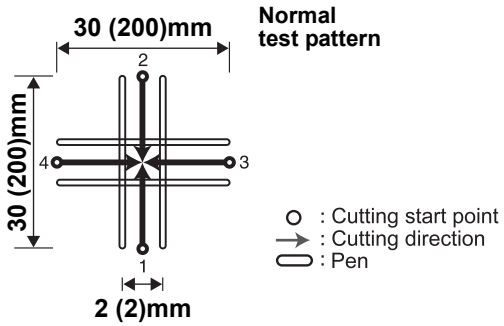

- Values in parentheses ( ) in the diagram show the sizes of Roller.
- First, mount a pen in Unit A.

1 **Press the FUNCTION key in the local mode.**

```
<FUNCTION>
SET UP          [ENT]
```

2 **Press the jog key ▲ or ▼ to select [TOOL ADJUST] .**

```
<FUNCTION>
TOOL ADJUST     [ENT]
```

3 **Press the ENTER key.**

```
<TOOL SELTECT>
TOOL: B:REC.CUTTER1
```

4 **Press the jog key ▲▼ to select tool.**

- Set value: REC.CUTTER1~2, θCUTTER, ROLLER1~3

```
<TOOL SELTECT>
TOOL: B:REC.CUTTER1
```

5 **Press the ENTER key.**

```
<FUNCTION>
MARK DETECT     [ENT]
```

6 **Attach the selected tool (☞ P.2-22).**

7 **Press the jog key ▲▼ to select [θ ADJUST].**

```
<REC.CUTTER1 ADJ>
θ ADJUST        [ENT]
```

8 **Press the ENTER key.**

```
<θ ADJUST>
θ:   0.00°
```

9 **Press TEST key.**

```
<TEST PATTERN>
DRAW:[ENT] POS:[JOG]
```

10 **Press the jog keys to move the head to the drawing position.**

11 **Press ENTER to start drawing the test pattern.**

12 **Press END key to return to the selection of the adjustment value.**

<θ ADJUST>
θ: 0.00°

13 **Press the ENTER key.**

14 **Adjust by pressing ▲▼.**

Set values:- 45.00º ~ + 45.00º

• For details, see P.6-10 “Adjusting the θ Angle”.

<θ ADJUST>
θ: 1.00°

15 **Press ENTER key and determine the adjustment value.**

<CENTER ADJUST>
CENTER A: 0.00mm

• When cancel the registration, press END.

• When quit, press END in the display of step 12.

Adjusting the θ Angle

The θ angle can be adjusted on the screen below.

Press ▲ or ▼ to adjust. → <θ ADJUST>
θ: 0.00°

(1) Check the displacement between the patterns drawn with the pen and cutter (roller).

(2) Make the adjustment.

Rotated clockwise	Rotated counterclockwise
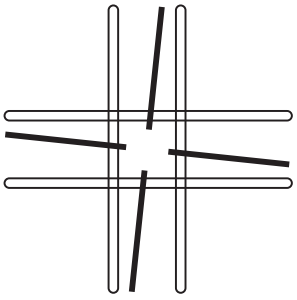	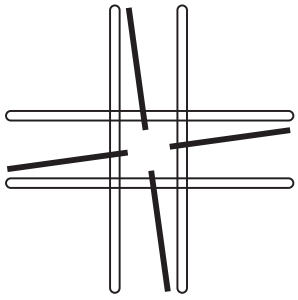
Press ▼ to decrease the CUTTER θ value.	Press ▲ to increase the CUTTER θ value.

Circle θ Correction

Conduct the operations below to correct for displacements if the start and end points do not match when cutting (drawing) a circle.

Setting Arc θ Correction

Before setting circle θ correction, set arc θ correction to Enable.

1 **Press the FUNCTION key in the local mode.**

<FUNCTION>
SET UP [ENT]

2 **Press the jog key ▲ or ▼ to select [TOOL ADJUST] .**

<FUNCTION>
TOOL ADJUST [ENT]

3 **Press the ENTER key.**

<TOOL SELTECT>
TOOL: B:REC.CUTTER1

4 **Press the jog key ▲▼ to select tool.**

- Set value: REC.CUTTER1~2, θCUTTER, ROLLER1~3

<TOOL SELTECT>
TOOL: B:REC.CUTTER1

5 **Press the ENTER key.**

6 **Attach the selected tool (☞ P.2-22).**

7 **Press the jog key ▲▼ to select [CIRCLEθ ADJUST].**

<REC.CUTTER1 ADJUST>
CIRCLEθ ADJUST [ENT]

8 **Press the ENTER key.**

<CIRCLEθ ADJUST>
R<5 : 0.0°

9 **Press the jog key ▲▼ to select [θ CORRECT].**

<CIRCLEθ ADJUST>
θCORRECT : OFF

10 **Press the ENTER key.**

11 **Press the jog key ▲▼ to select "ON".**

<CIRCLEθ ADJUST>
θCORRECT : ON

12 **Press ENTER.**

- The setting is saved.
- Press END if you do not want to save the settings.

<CIRCLEθ ADJUST>
R<5 : 0.0°

Circle θ Correction

The unit can conduct correction for five circles of different radius.

Circle type for correction	Set values
Radius (R) ≤ 5 mm	- 20° ~ + 20°
5 mm < Radius (R) ≤ 10mm	- 20° ~ + 20°
10 mm < Radius (R) ≤ 20mm	-9.8° ~ + 9.8°
20 mm < Radius (R) ≤ 50mm	-9.8° ~ + 9.8°
50 mm < Radius (R) ≤ 100mm	-9.8° ~ + 9.8°
100 mm < Radius (R)	-9.8° ~ + 9.8°

Important!

- In some cases, this cannot be corrected by the CAD system.
- First, set arc θ correction to Enable.
  If arc θ correction is not set to Enable, this offset will not be applied to the drawing (cut).

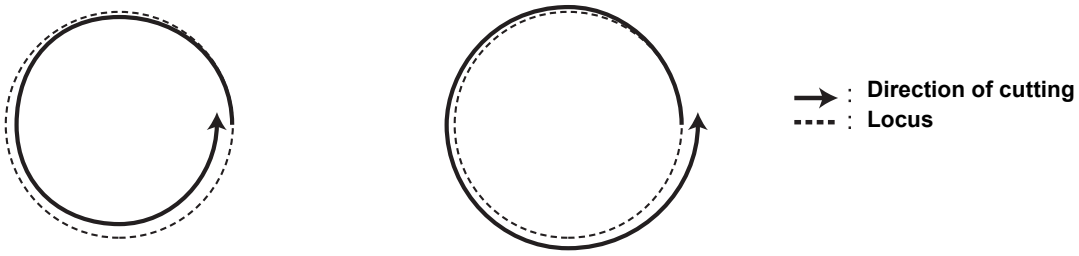

1 **Press the FUNCTION key in the local mode.**

```
<FUNCTION>          ≎
SET UP              [ENT]
```

2 **Press the jog key ▲ or ▼ to select [TOOL ADJUST] .**

```
<FUNCTION>          ≎
TOOL ADJUST         [ENT]
```

3 **Press the ENTER key.**

```
<TOOL SELTECT>
TOOL: B:REC.CUTTER1
```

4 **Press the jog key ▲▼ to select tool.**

- Set value: REC.CUTTER1~2, θCUTTER, ROLLER1~3

```
<TOOL SELTECT>
TOOL: B:REC.CUTTER1
```

5 **Press the ENTER key.**

6 **Attach the selected tool (☞ P.2-22).**

7 **Press the jog key ▲▼ to select [CIRCLEθ ADJUST].**

```
<REC.CUTTER1 ADJ>   ≎
CIRCLEθ ADJUST [ENT]
```

8 **Press the ENTER key.**

```
<CIRCLEθ ADJUST>    ≎
R<5          :  0.0°
```

9 **Press (TEST) key.**

```
<TEST PATTERN>
DRAW: [ENT]  POS : [JOG]
```

10 **Press the jog keys to move the head to the drawing position.**

11 **Press (ENTER) to start drawing the test pattern.**

12 **Press (END) key to return to the selection of the adjustment value**

```
<CIRCLEθ ADJUST>
R<5          :  0.0°
```

13 **Press the jog key (▲)(▼) to select circle type for collection.**

```
<CIRCLEθ ADJUST>
20<R<50      :  0.0°
```

• Set values: R<5, 5<R<10, 10<R<20, 20<R<50, 50<R<100, 100<R

14 **Press the (ENTER) key.**

15 **Press (▲)(▼) to adjust**

• For details, see P.6-13 "Circle θ Correction Method".

16 **Press (ENTER) key and determine the adjustment value**

• When cancel the registration, press (END).
• (▲)(▼)When adjust the other pattern, press xx xx and display the screen to adjust and repeat steps 12 and later.
• When quit, press (END) in the display of step 12.

Circle θ Correction Method

End point displaced inward	End point displaced outward
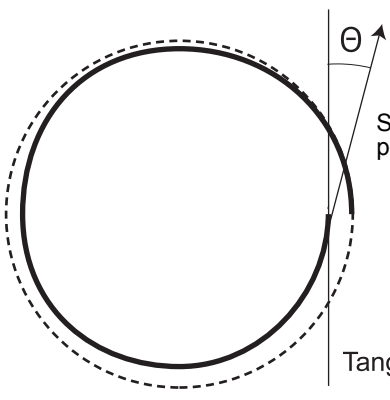	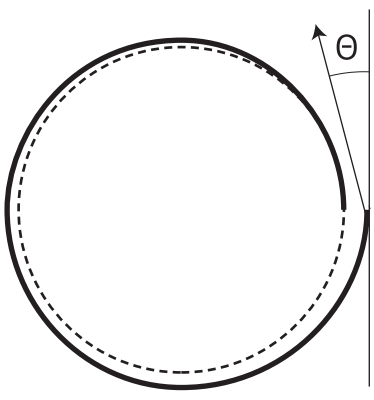

Make some final checks if you think that the unit has broken down. Contact your Mimaki representative if the problem cannot be solved by the remedy described.

Unit does not operate when the power is turned ON

Is the power connected properly ?	NO →	Correctly connect the power cable. (☞ P.1-7)
Is the EMERGENCY switch pressed in ?	Yes →	Release the EMERGENCY switch. (☞ P.1-8)

Unit does not operate after the CAD data is sent

Is the unit in local status ?	Yes →	Set to remote status. (☞ P.1-20)
Is the interface cable connected properly ?	NO →	Correctly connect the interface cable. (☞ P.1-7)
Has the interface been changed ?	Yes →	Perform the Data Clear operation. (☞ P.2-26)

An error occurs when the data is sent

Do the communications conditions match ?	NO →	Match the plotter conditions to the conditions in the PC. (☞ P.1-22)
Do the PC and plotter commands match ?	NO →	Change the commands on the computer side. (☞ P.3-29)

Tool lifts up the paper

Is the paper (sheet) wrinkled or flexed?	Yes →	Flatten out the work. (☞ P.2-6)
Is pen up / down operation defective?	Yes →	Turn off the power and move Unit A vertically. Contact your Mimaki representative if Unit A does not move up and down normally.
Isn't Z stroke too small?	Yes →	Change the Z stroke value. (☞ P.3-16)
Isn't pen up height too low?	Yes →	Lift up the pen up height. (☞ P.3-23)

Drawn lines are broken or smudged

Is the Unit A screw loose?	Yes →	Re-tighten the Unit A screw. (☞ P.2-14)
Is the drawing speed too high?	Yes →	Decrease the “SPEED” in the cutting conditions. (☞ P.2-12)
Is the drawing pressure too low?	Yes →	Increase the “PRESSURE” in the cutting conditions. (☞ P.2-11)
Is the pen out of ink?	Yes →	Replace the pen with a new one. (☞ P.1-13)

No reciprocating movement

Inadequate lubrication of the reciprocating shaft?	Yes →	Apply a small amount of grease to the shaft. (☞ P.5-3)
Is the oscillation movement turned off?	Yes →	Set the “VIBRATION” cutting condition from 1 to 5. (☞ P.2-11) Contact your Mimaki representative if reciprocating movement does not start.
Isn't the protection door open?	Yes →	Firmly close the protection door.

A message appears on the screen when an abnormality occurs in this unit.
Take the appropriate remedy for the displayed message.

Non-fatal Errors

Display	Cause	Remedy
ERROR C02 MAIN RAM	Trouble has occurred in the control RAM.	Contact your dealer or a sales office of MIMAKI.
ERROR C04 EEPROM	Trouble has occurred in the system ROM.	
ERROR C10 COMMAND	Code other than command data has been received.	Check the command setting on the host computer.
ERROR C11 PARAMETER	A parameter outside the numerical range has been received.	Check the parameter.
ERROR C12 DEVICE	The plotter received an improper device control command.	Check the command setting on the host computer.
ERROR C13 PM OVER	Data on polygon has overflown the polygon buffer.	Change the setting so that the polygon command is not used.
ERROR C20 I/O	The communication condition is different.	Make the communication condition same as that of the host computer side. (☞ P.3-77)
ERROR C27 BUFFERover	The interface is faulty.	Check the interface cable.
ERROR 901 OPERATION	An invalid operation was performed on the control panel.	Refer to the relevant page of operation manual for valid operations.
	An ASCII dump was made with an effective area less than A3.	Set the effective area to at least A3 size before conducting an ASCII dump.
	An ASCII dump was made with the origin set at a position that does not allow an effective area of A3 to be obtained.	
ERROR C31 NO DATA	The plotter started the plural sheets cutting but found that there is no data in the receiver buffer.	Refer to the explanation of the plural sheets cutting function. (☞ P.3-9)
ERROR C32 DATAtooBIG	Received data is too large, it is not possible to cut the number of copies	
ERROR 902 DAT REMAIN	The plotter executed an improper operation during a halt.	Press the REMOTE key to cut the remaining data or execute data clear if there is no need of using the data in the receiver buffer. (☞ P.3-48)

Display	Cause	Remedy
ERROR C36 MARKdetect	No registration mark was detected.	Make sure workpiece is not floating
		Check to see if the starting point to detect the registration mark has been set properly. (☞ P.3-21)
		Check to see if the black registration mark is printed against the white background.
		Check to see if there is no dust or dirt between the registration marks.
		Check to see if there is no mistake in registration mark settings. (☞ P.3-16)
		Set the “MARK FILL UP” of registration mark detection to “ON” when filled in around the registration mark. (☞ P.3-20)
		Make sure the height of the sensor is correct. (☞ P.4-11)
		Confirm the status and the settings described above. If still no registration mark is detected, contact your distributor or a sales office of MIMAKI.
ERROR C37 MARK ORG	The origin point was detected outside the cutting area.	Arrange the registration marks inside the sheet.
ERROR C38 MARK SCALE	Registration mark detection was not achieved. However, this error is attributable to a false detection or a compensation value setting error, since the calculated compensation value is wrong.	Correct the compensation value if it is wrong, and perform detection again.
	The required scale compensation value was not smaller than 1.3 times or not greater than 0.7 times.	Remove the cause of the detection error, for example, correct the blurred print of registration mark data and then retry.
	A detection error occurred since the distance from the adjacent graphics was too short.	Increase the distance from the adjacent graphics properly, and perform printing again.
	The designateed spacing between the registration marks is not correct.	The value of the spacing between the registration marks designated by the command is wrong and it is attributable to a selection error of data. Therefore, check the output data.
	The print is not uniform and some graphics are omitted.	Correct the graphic data to obtain uniform print and perform printing again.
	As the printed registration mark was blurred, it was not read correctly and the registration mark of the next graphics was read by mistake.	Perform printing again with care that the print is not blurred.

Display	Cause	Remedy
ERROR 401 MOTOR X	An excessive load was applied to the Y bar driving motor.	Turn the power off once and turn it on again. If the same error message still appears, contact your distributor or a sales office of MIMAKI.
ERROR 403 X CURRENT	An overcurrent error in the motor in the Y bar driving motor.	
ERROR 402 MOTOR Y	An excessive load was applied to the carriage driving motor.	
ERROR 404 Y CURRENT	An overcurrent error in the motor in the carriage driving motor.	
ERROR 462 MOTOR θ	An excessive load was applied to the θ motor.	
ERROR 464 θCURRENT	An overcurrent error in the motor in the θ motor.	
ERROR 461 MOTOR Z	An excessive load was applied to the Z motor.	
ERROR 463 Z CURRENT	An overcurrent error in the motor in the Z motor.	
ERROR 50a Y ORIGIN	The plotter has failed to detect the origin sensor.	Turn the power off once and turn it on again. If the same error message still appears, contact your distributor or a sales office of MIMAKI.
ERROR 511 Z ORIGIN		
ERROR 532 θ ORIGIN		
ERROR 533 X ORIGIN		
ERROR 521 ERROR INIT MOTOR	Motor can not be initialized.	Turn the power off once and turn it on again. If the same error message still appears, contact your distributor or a sales office of MIMAKI.
ERROR 503 COVER OPEN	Protection door is open.	Close the protection door.
ERROR C60 PenEncoder	The height of the pen cannot be detected.	Turn the power off once and turn it on again. If the same error message still appears, contact your distributor or a sales office of MIMAKI.
ERROR C76 VAC / TILT	Excessive vacuum current.	Turn off the plotter and vacuum. Wait a while and turn them back on.
ERROR C75 REC.CUTTER	Appropriate cutting conditions not set.	Set appropriate cutting condition values. (☞ P.2-11)
	Worn blade	Replace the blade with a new one. (☞ P.1-18)
*** OFF SCALE ***	Data extends beyond the effective cutting area.	**(1)** Stop processing (☞ P.2-25) and clear data. **(2)** Expand the effective cutting area or enter data within the effective cutting area.

Status message

The messages given below appear in the remote mode.
They do not indicate errors but require an appropriate action.

Message	Cause	Remedy
** OFFSCALE **	The cutting data exceeds the effective cutting area.	Either increase the size of the cut area or reduce the data
** DIGITIZE **	The plotter has received the digitization command (DP;) from the host computer and has entered the digitization mode.	Move the pen to a desired location, where necessary, and press the REMOTE key. To reset the digitization mode, execute the data clear using the FUNCTION key.
COPY SKIP	A mark cannot be detected during continuous copying. One pattern is skipped.	There is no problem if the marks are successfully detected after skipping one pattern. If marks cannot be detected continuously by five patterns or more, [ERRC36 MARKdetect] (☞ P.6-17) is displayed.
SHEET EXCHANGE	The plotter is waiting for the work to be replaced during continuous copying in the single mode.	Replace the leaf work with a new one, and resume continuous copying.
F-ROM WRINTING	The plotter is now storing the tool parameters and setting parameters. The data is saved in flash memory so that the saved data will not be erased even when the power is turned off.	Do not turn the power off while this message is displayed.

Sample Cut

IIn case that normal data cutting cannot be performed etc., perform cutting with the sample stored in this plotter to find out the cause of cutting error.

Important!

- If there is data that has not been cut in the receive buffer, an error is displayed and can not cut the sample. Run the data clear at first.

Overview of the Self Test

PATTERN CUT 1

Uses the tool selected by the Tool Select function. The sample is a Japanese family crest using a variety of line segments.

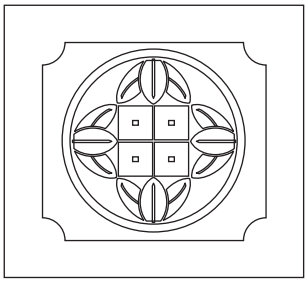

PATTERN CUT 2

The sample is a paper pattern for the apparel industry. The outer lines are cut after drawing the inner lines.

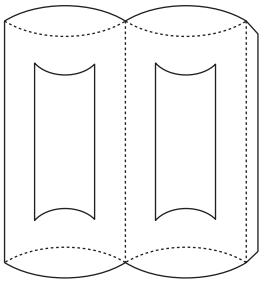

Necessary tool
A unit: Swivel cutter
B unit: Roller1

SAMPLE 0.5 mm

Use this to make a paper container sample from thick paper (approx. 0.5 mm thick). The perimeter is cut after cutting the grid. Requires thick paper at least A4 in size.

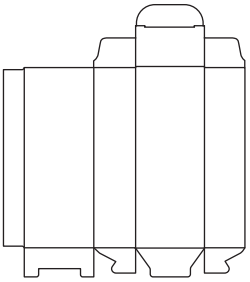

Necessary tool
A unit: Swivel cutter
B unit: Roller1

SAMPLE1.0 mm

Use this to make a paper container sample from corrugated cardboard (approx. 1 to 2 mm thick). The perimeter is cut after cutting the grid. Requires corrugated cardboard at least A3 in size.

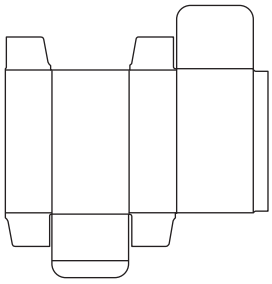

Necessary tool
B unit: Roller1
Change the tool to reciprocating in the middle

SAMPLE 1.5 mm

Use this to make a paper container sample from corrugated cardboard (approx. 1.5 to 3 mm thick). The perimeter is cut after cutting the grid. Requires corrugated cardboard at least A2 in size.

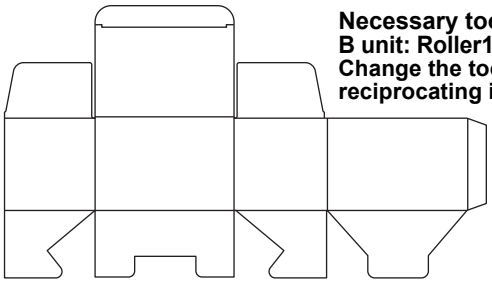

Necessary tool
B unit: Roller1
Change the tool to reciprocating in the middle

SAMPLE BUFFER

Use this to make a cushioning material sample from urethane form (sponge 10mm thick).

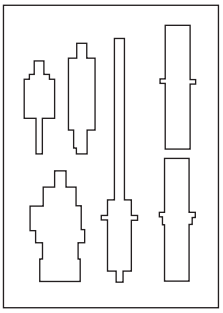

Necessary tool
B unit: Reciprocating cutter1

R = 3 / 5 / 10 / 20 / 50 / 100

Cuts a circle with the selected radius. (Radius (R) = 3, 5, 10, 20, 50, 100 mm)

Perform SAMPLE CUT to Find out the Cause of Cutting Error.

The pen number must assigned before conducting PATTERN CUT or SAMPLE CUT. (☞ P.3-9)
Set the following values as the initial values.

Pen No.		Model R1
1	Head	B
	Tool	Reciprocating cutter 1 (Set a vibration to other than OFF)
2	Head	B
	Tool	Roller 1
3	Head	B
	Tool	θCUTTER
4	Head	B
	Tool	Roller 2
5	Head	A
	Tool	Swivel blade
6	Head	A
	Tool	Pen

1 **Set the origin at the point where you wish to run the sample cut**

2 **Press the FUNCTION key in the local mode.**

<FUNCTION> ⇕
SET UP [ENT]

3 **Press the jog key ▲ or ▼ to select [SAMPLE CUT] .**

<FUNCTION> ⇕
SAMPLE CUT [ENT]

4 **Press the ENTER key.**

<SELECT PATTERN> ⇕
PATTERN CUT1 [ENT]

5 **Press the jog key ▲ or ▼ to select the self test items**

<SELECT PATTERN> ⇕
PATTERN CUT2 [ENT]

• Set values: PATTERN CUT1, 2 / SAMPLE 0.5mm, SAMPLE 1.0mm, SAMPLE1.5mm, SAMPLE BUFFER, CIRCLE CUT R=3~R=100

6 **Press ENTER to draw the data.**

• Press END to cancel SAMPLE CUT.j\

Result of SAMPLE CUT

Sample data can be cut successfully, but other data cannot.
The host computer is faulty.
Sample data as well as other data cannot be successfully cut either.(When leaving the start/end lines without cutting off)
Increase the set value of [ADJ-PRS OFS] (☞ P.3-24) to raise the pressure for pressing the cutter blade down.

CFL-605RT Specifications

SPECIFICATIONS \ Type		CFL-605RT
Effective plotting width	X axis	610 mm
	Y axis	510 mm
Maximum set work size	X axis	660 mm
	Y axis	555 mm
Driving method		X, Y, Z, θ axis: ,DC servo motor
Maximum speed		XY: 423mm / sec (45º direction) (Maximum cut set speed: 300mm / sec)*1
Mechanical resolution		X axis : 4.3µm Y axis : 3.7 µm θ axis : 0.0225° Z axis : 7.5 µm
Command resolution		0.025 mm / 0.010 mm (switchable on operation panel)
Maximum cutting pressure		Swivel cutter: 1,000g tial cutter / Crease: 1,500g
Static accuracy*2	Repeat accuracy	Less than ± 0.2 mm (media expansion and contraction are excluded)
	Range accuracy	± 0.1 mm or ± 0.2% of travel distance, whichever is largest
	Origin reproducibility	± 0.10mm
	Perpendicular accuracy	Less than 0.2 / 430 mm
Work securing method		Vacuum suction by vacuum unit
Maximum cut work thickness		tial cutter : 2 mm Reciprocating cutter : 10 mm
Maximum set work thickness		tial cutter : 2 mm Reciprocating cutter : 10 mm
Settable work weight		10 kg max. (No point load)
Receiving buffer capacity		27 MB (17MB at sorting)
Command		MGL-IIC3
Interface		USB / RS-232C / Ethernet
Operating environment	Usage environment	5 - 35 °C 35 - 75 % (Rh), no condensation
	Accuracy guarantee range	12 - 25 °C 45 - 65 % (Rh), no condensation
Safety Standard		VCCI-classA, CE Marking, CB Certificate,US safety standards, UL 60950-1 RoHS , REACH, FCC Part 15-ClassA
External dimensions	Width	1,320 mm
	Depth	1,045 mm
	Height	1,100 mm
	Cutting panel surface height	Approx. 779mm
Weigh		Less than 109kg(including vacuum)
Power supply		Single phase AC100 - 120V / 200 - 240 V, 50 / 60 Hz, 500 W or less

*1. I depends on the media.

*2. This is the accuracy for pen writing with almost no load. The guaranteed temperature range is 20 to 25°C.



© MIMAKI ENGINEERING CO., LTD.2016

KT

FW : 1.40