Plusrite®

CATALOG NUMBER: BAMH175-CWA/V5

175W M57

Metal Halide Lamp Ballast

60 Hz CWA

3X4 CORE.WMF

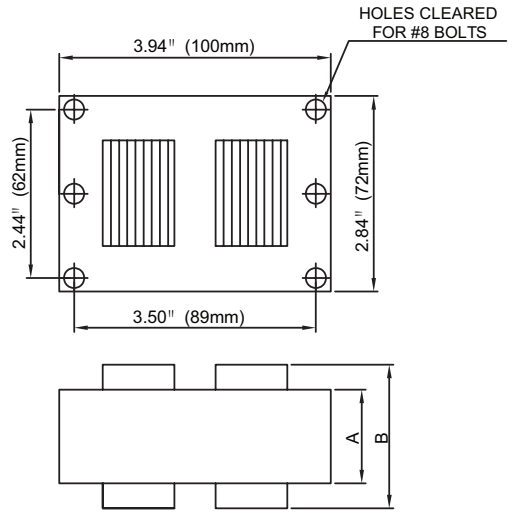

Input Volts		120	208	240	277	480
Circuit Type	CWA					
REGULATION						
Line Volts	±10%					
Lamp Watts	±10%					
LINE CURRENT(Amps)						
Operating		1.85	1.10	0.90	0.80	0.40
Open Circuit		1.45	0.90	0.75	0.70	0.40
Starting		1.40	0.80	0.70	0.65	0.30
RECOMMENDED FUSE (Amps)		5	3	3	3	2
TEMPERATURE RATINGS						
Insulation Class	180 (H)					
Coil Temperature Code		B	C	C	B	B
Benchtop Coil Rise		77.8	80.0	81.3	76.1	76.1
Power Factor (Min)	90%					
Input Watts	215 W					
Efficiency						
NOM. OPEN CIRCUIT VOLTAGE	320					
INPUT VOLTAGE AT LAMP DROPOUT		55	90	95	120	240
MIN AMBIENT STARTING TEMP	-20°F/-30°C					
60 HZ TEST PROCEDURES						
High Potential Test (Volts)						
1 Minute	1,650 V					
1 Second	2,000 V					
Open Circuit Voltage Test (V)	290 - 360					
Short Circuit Current Test (A)						
Secondary Current Min	1.55					
Secondary Current Max	1.95					
Input Current Min		1.05	0.60	0.50	0.45	0.30
Input Current Max		1.65	0.95	0.85	0.70	0.50
CORE and COIL Specifications						
Dimension A (in)	2.44					
Dimension B (in)	4.02					
Weight (lbs)	7.0					
Lead Lengths (in)	12					
CAPACITOR REQUIREMENT						
Microfarads	10.0 uf					
Volts (Min)	400 V					

Capacitor:

Microfarads:	10.0 uf
Volts (Max):	400 V
Case Temp(Max):	100°C
D:	1.65 in
L:	2.95 in
A:	0.63 in

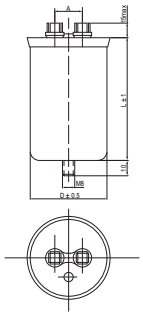

Oil-Filled Capacitor

Ignitor: **None**

No Ignitor Needed

Wiring Diagram:

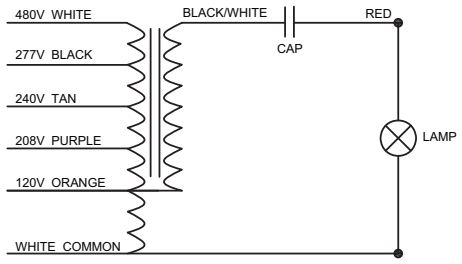

Data is based upon tests performed by Plusrite in a controlled environment and is representitive of relative performance. Actual performance can vary depending on operating conditions. Specifications are subject to change without notice.

Coil material: Cu/Al