Plusrite®

CATALOG NUMBER: BAPS100-HX/V4

100W M90

Pulse Start Metal Halide Lamp Ballast

60 Hz HX-HPF

3X4 CORE.WMF

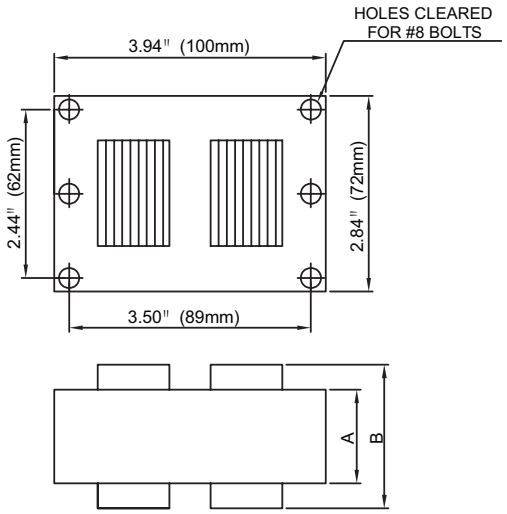

Input Volts		120	208	240	277
Circuit Type	HX-HPF				
REGULATION					
Line Volts	±5%				
Lamp Watts	±10%				
LINE CURRENT(Amps)					
Operating		1.10	0.65	0.55	0.50
Open Circuit		2.60	1.50	1.30	1.15
Starting		1.00	0.60	0.50	0.45
RECOMMENDED FUSE (Amps)		7	4	4	3
TEMPERATURE RATINGS					
Insulation Class	180 (H)				
Coil Temperature Code	A				
Benchtop Coil Rise		70.1	69.8	65.9	71.8
Power Factor (Min)	90%				
Input Watts	125 W				
Efficiency					
NOM. OPEN CIRCUIT VOLTAGE	270				
INPUT VOLTAGE AT LAMP DROPOUT		80	140	160	185
MIN AMBIENT STARTING TEMP	-20°F/-30°C				
60 HZ TEST PROCEDURES					
High Potential Test (Volts)					
1 Minute	1,600 V				
1 Second	1,900 V				
Open Circuit Voltage Test (V)	240 - 300				
Short Circuit Current Test (A)					
Secondary Current Min	1.20				
Secondary Current Max	1.50				
Input Current Min		0.40	0.25	0.20	0.15
Input Current Max		0.75	0.45	0.40	0.35
CORE and COIL Specifications					
Dimension A (in)	1.70				
Dimension B (in)	3.10				
Weight (lbs)	5.2				
Lead Lengths (in)	12				
CAPACITOR REQUIREMENT					
Microfarads	12.0 uf				
Volts (Min)	280 V				

Capacitor:

Microfarads:	12.0 uf
Volts (Max):	330 V
Case Temp(Max):	100°C
D:	1.65 in
L:	2.56 in
A:	0.63 in

Ignitor:

Case Temp (Max):	105 °C
BTL Distance (Max):	2 ft

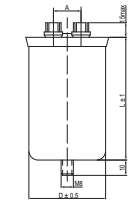

Oil-Filled Capacitor

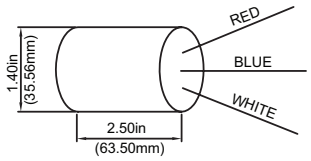

Wiring Diagram:

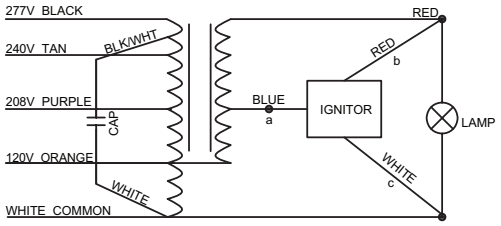

Data is based upon tests performed by Plusrite in a controlled environment and is representitive of relative performance. Actual performance can vary depending on operating conditions. Specifications are subject to change without notice.

Coil material: Cu/Al